ESA RoboTech



Catalog

ESA RoboTech



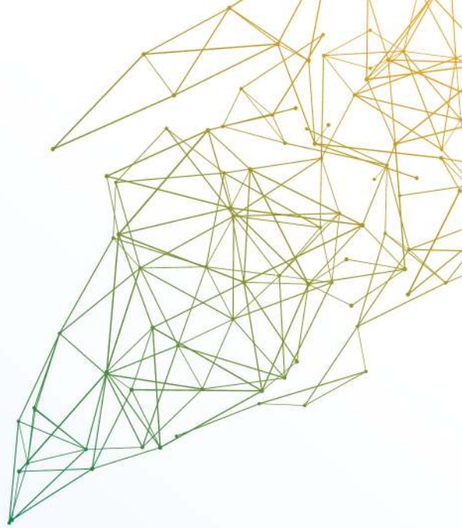



END OF ARM TOOLING





End of arm tool components

End of arm tool components

Quick changer 001~044

Eoat components 045~109

Gripp components 110~202

Vacuum components 203~234

Fitting 235~242

Air nippers 243~284

Special grippers 249~252

01 Quick changer



Quick changer
P001~P009



Fixture mounting plate
P010~P012



Quick changer
P013~P014



Quick changer
P015~P022



Automatic Quick changer
P023~P031

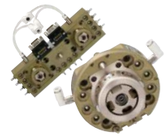

Automatic Quick changer
P032~P044

02 Eoat components



Eoat Profile
P045~P047



Screw T-nuts...
P048~P051



Eoat Profile holder
P052~P059



L-shaped fixing plate
P060~P093



Air nipper bracket
P094~P096



Bracket
P097~P109

03 Gripp components



Sprue Gripper
P110~P150



Finger Gripper
P151~P163



Pneumatic tilt unit for EOATs
P164~P170



Paraller gripper
P171~P192



Mould Positioner
P193~P194



Bulging Device
P195~P198



Needle Gripper
P199~P202

04 Vacuum components



Vacuum cup suspensions
P203~P214



Vacuum cup
P215~P225



Vacuum cup
P226~P228



Vacuum cup
P229~P234

05 Fitting



Sensor box
P235~P235



Sensor
P236~P236



Air Connector
P237~P241



Air hose
P242~P242

06 Air nipper



Displacement type Air nipper
P243~P259



Air push nipper
P260~P262



Air heat nippers
P263~P267



Air nipper
P268~P284

07 Special grippers



GS.SGM.30.G18
P249



GS.SGM.40.G18
P250



GS.SGM.50.G18
P251



GS.SGM.70.G18
P252

Quick changer

- Easy replacement of the EOAT on the robot.
- Suitable also with vacuum ports.
- Avoids mistakes in pneumatic and electrical connections.
- 4, 8, 10 or 12 pneumatic connections.
- 9 electrical connections.
- The two parts (robot side and gripper side) are supplied separately.
- The robot side QCY unit cuts off the compressed air automatically during disengagement.

QC. . . -50



QC. . . -90



QCY. . . -90



QC. . . -150



QC. . . -200



(Model)	QC50	QC90	QC150	QC160	QC200
Medium	Filtered compressed air				
Pressure range	5~6 bar				
Temperature range	5 ~ 60 °C				
Robot side quick changer	QC-R50	QC-R90	QC-R150	QC-R160	QC-R200
Robot side quick changer weight	103 g	318 g	1159 g	1200 g	2640 g
Robot side quick changer with automatic value	QCY-R50	QCY-R90	QCY-R150	–	QCY-R200
Robot side quick changer with automatic value Weight	133 g	350 g	1180 g	–	2700 g
Grippersidequickchanger	QC-G50	QC-G90	QC-G150	QC-G160	QC-G200
Gripper side quick changer	65 g	227 g	837g	900 g	1890 g
Recomended payload	5kg	15kg	35kg	35kg	75kg

QC-R50

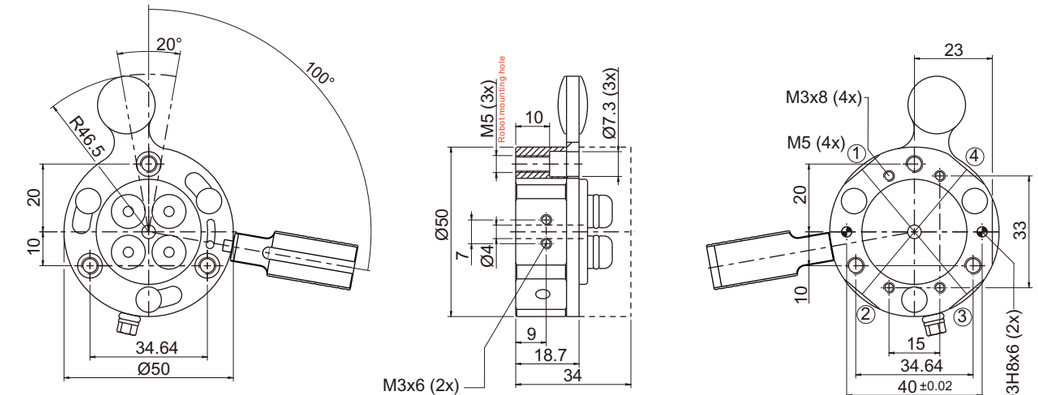

Quick changer

PN	0240259
Model	QC-R50

103g Weight 103g

QCY-R50

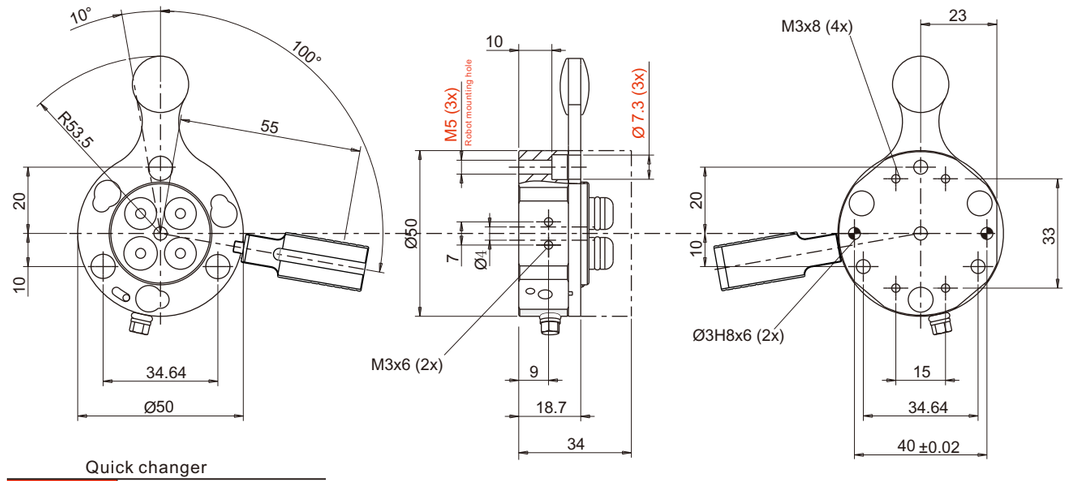

Quick changer

PN	0243981
Model	QCY-R50

133g Weight 133g

QC-G50

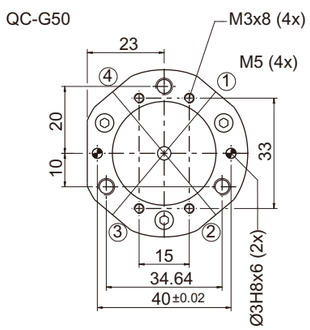

Quick changer

PN	0246432
Model	QC-G50

65g Weight 65g

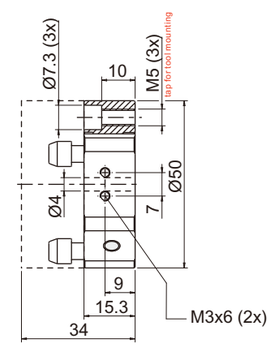

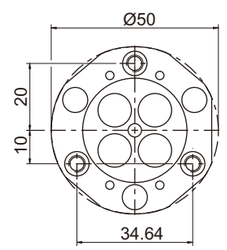

QC-R90

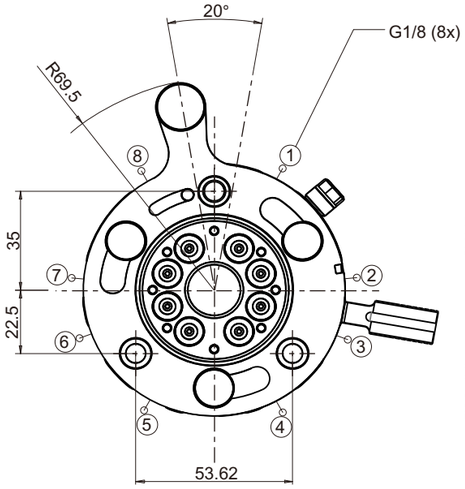

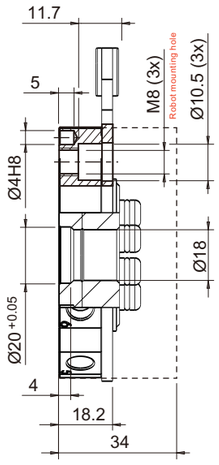

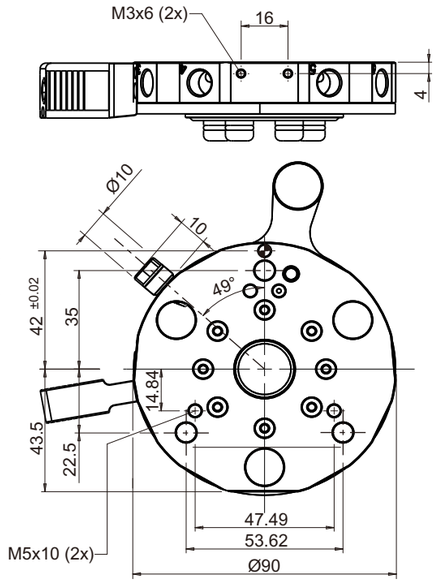

Quick changer

PN	0246876
Model	QC-R90
318g	Weight 318g

QCY-R90

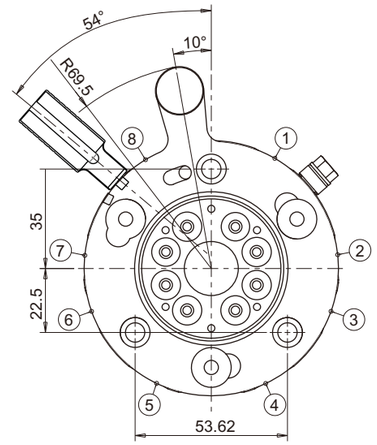

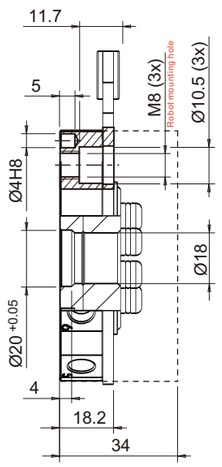

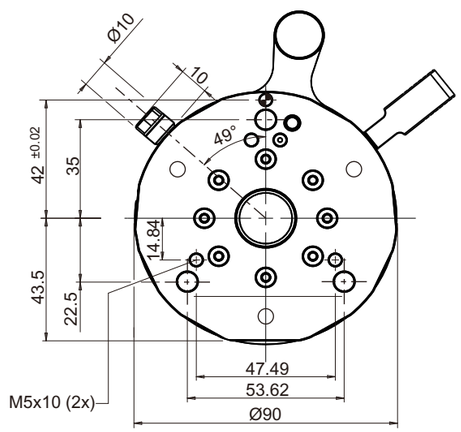

Quick changer

PN	0246527
Model	QCY-R90
350g	Weight 350g

QC-G90

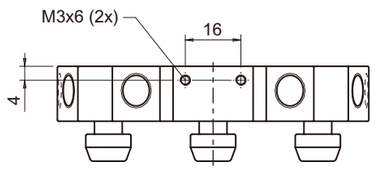

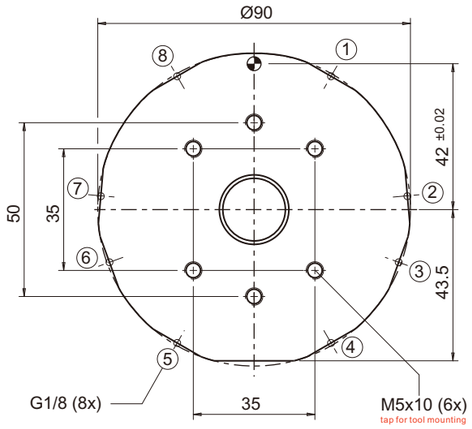

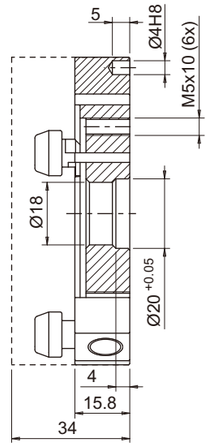

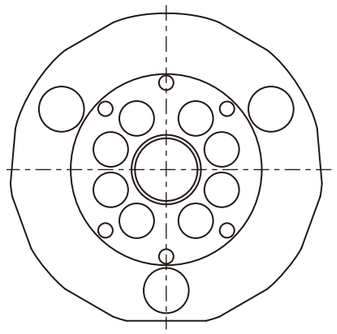

Quick changer

PN	0241497
Model	QC-G90
227g	Weight 227g







Application example

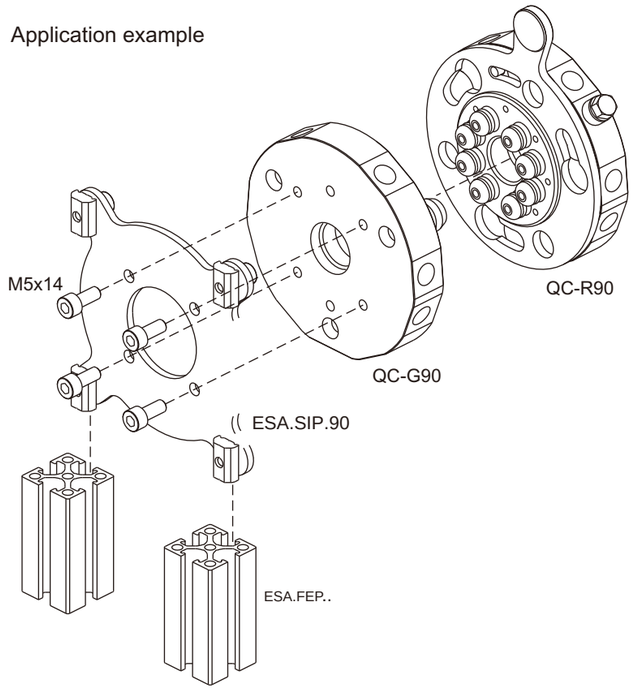

QC-R150

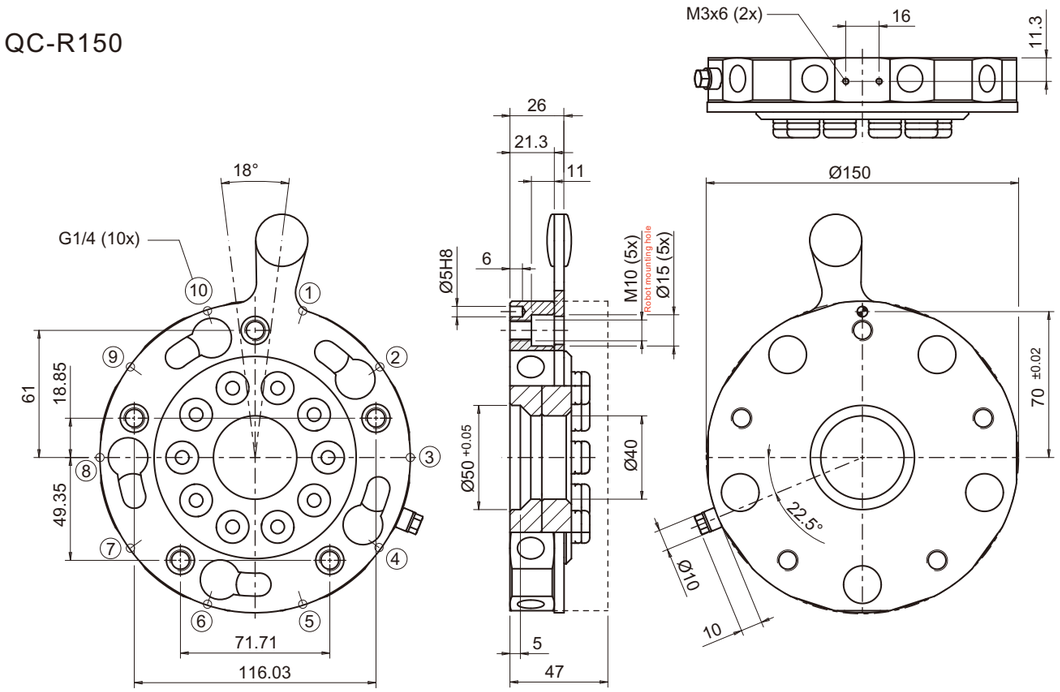

Quick changer

PN	0244187
Model	QC-R150

● 1159g ● Weight 1159g

QCY-R150

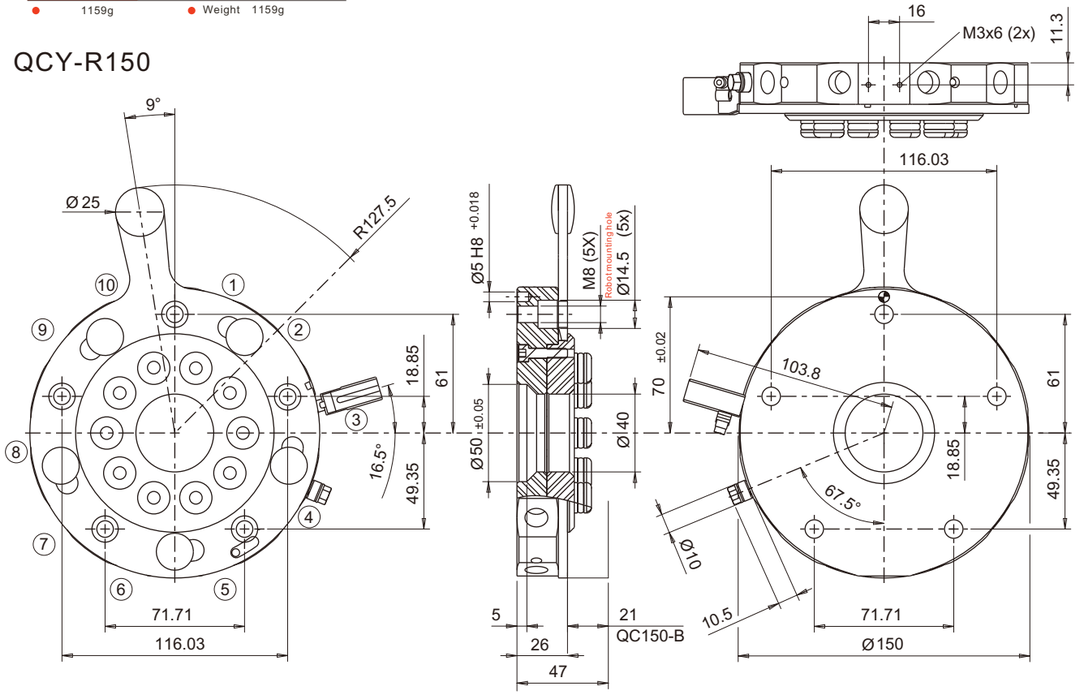

Quick changer

PN	0245195
Model	QCY-R150

● 1180g ● Weight 1180g

QC-G150

Quick changer

PN	0242394
Model	QC-G150

● 837g ● Weight 837g

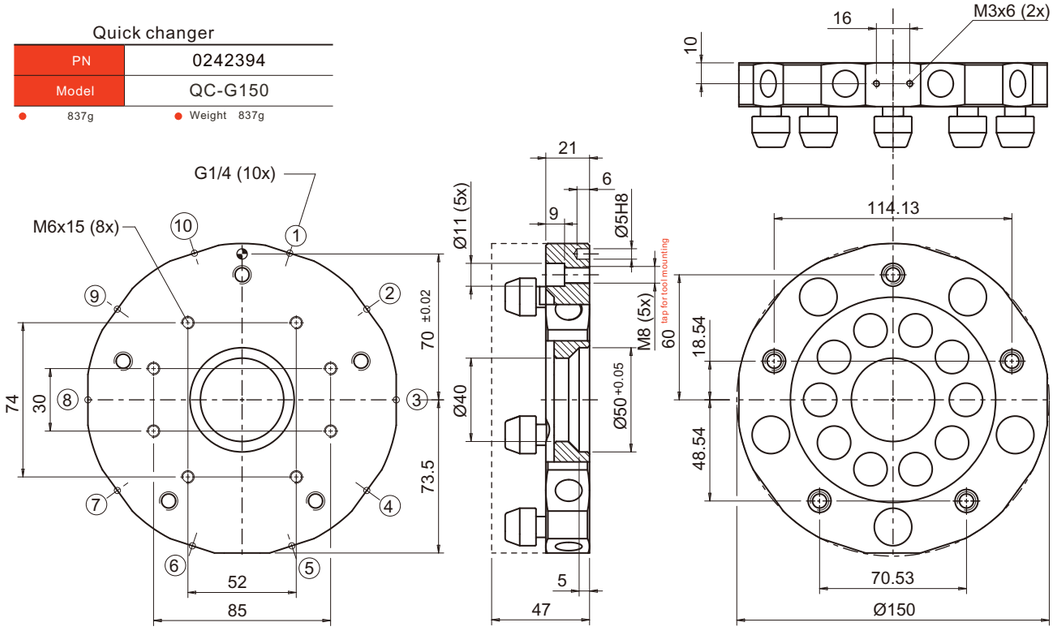





QC-R160

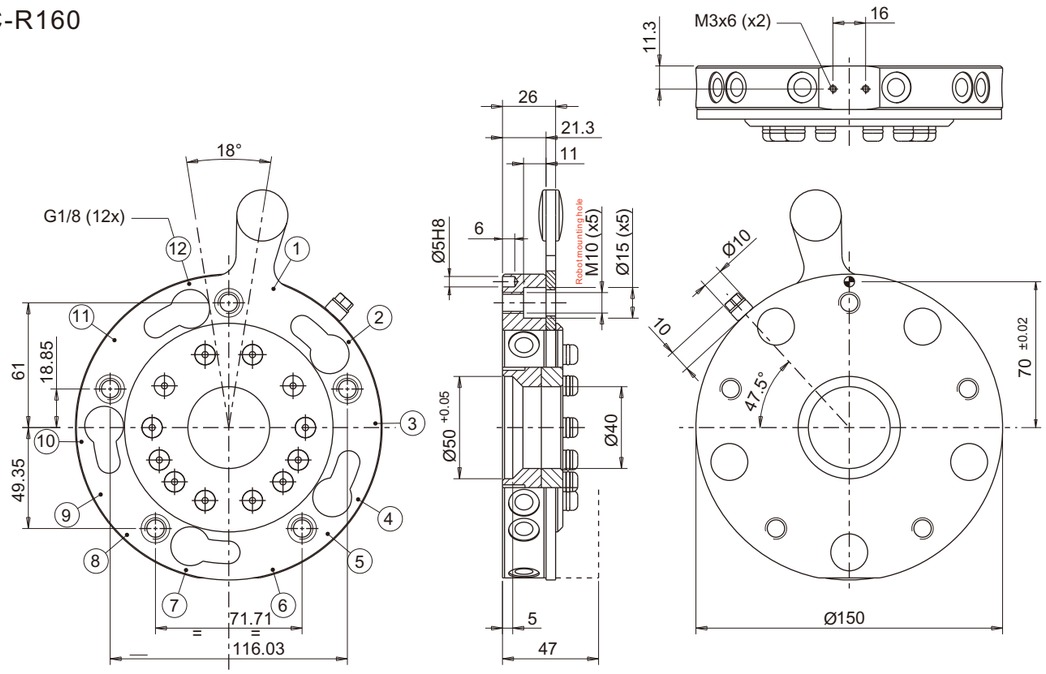

Quick changer

PN	0247451
Model	QC-R160

● 1200g ● Weight 1200g

QC-G160

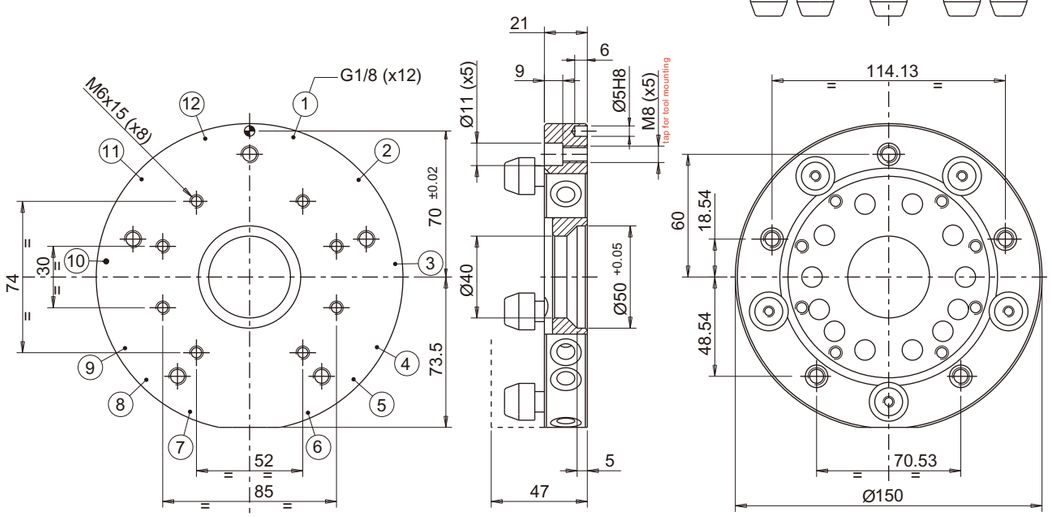

Quick changer

PN	0240018
Model	QC-G160

● 900g ● Weight 900g

QC-R200

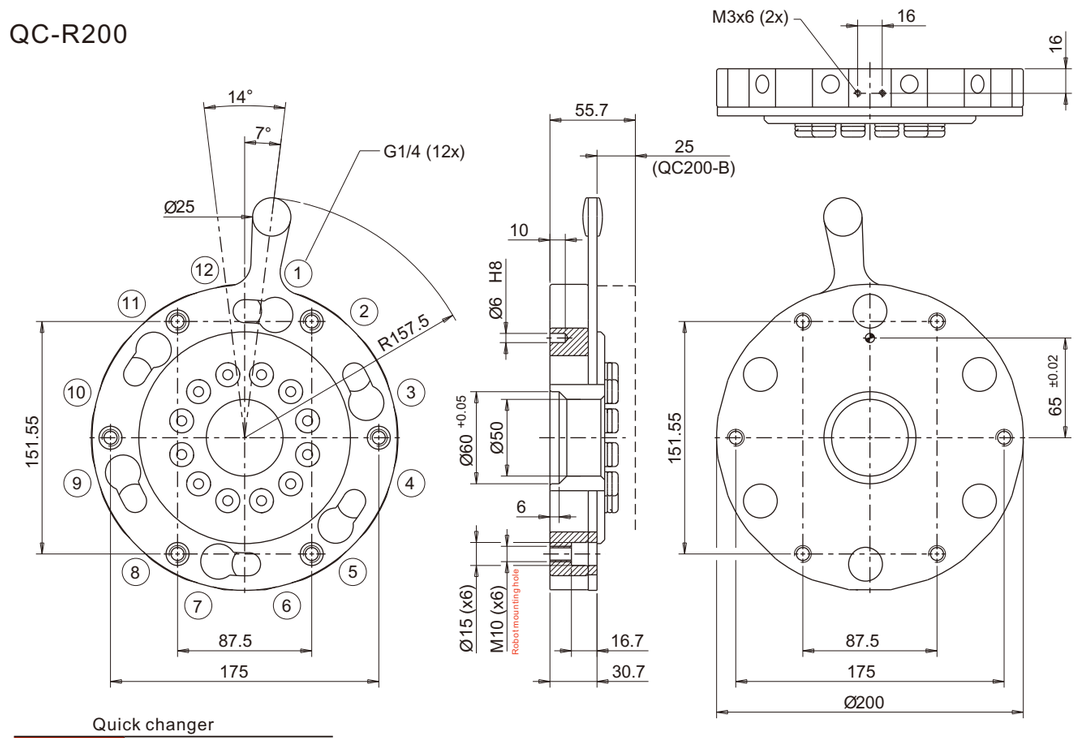

Quick changer

PN	0240366
Model	QC-R200

● 2640g ● Weight 2640g

QCY-R200

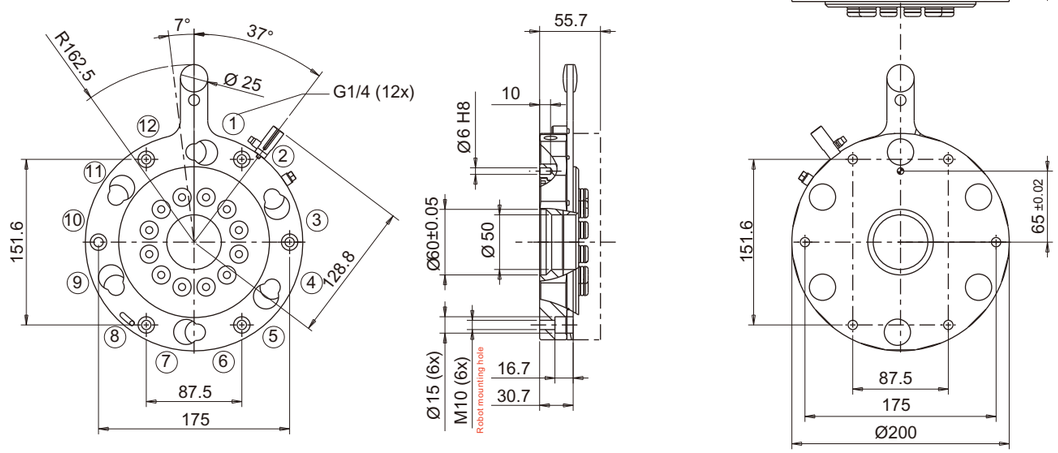

Quick changer

PN	0244559
Model	QCY-R200

● 2700g ● Weight 2700g

QC-G200

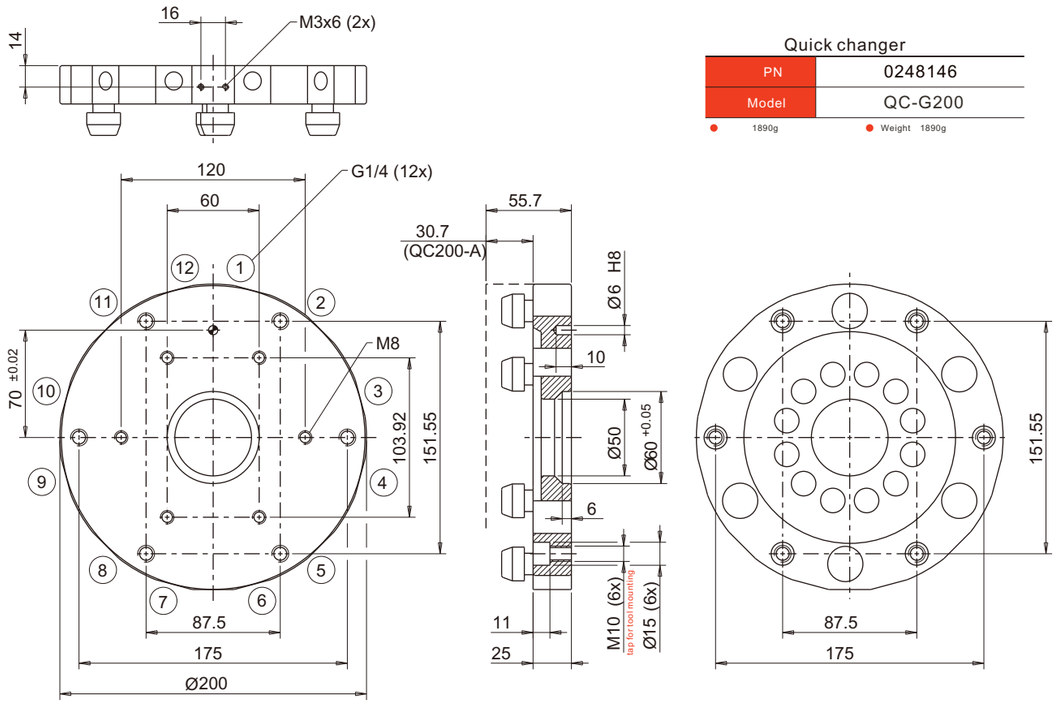

Quick changer	
PN	0248146
Model	QC-G200

● 1890g ● Weight 1890g





Interface

Model	ESA.SIP.50
PN	0247163
	screws Accessorier
(Screws)	ESA.STC.M5.L12 4
(Single hole shim)	ESA.STS.M5 4
T (T-Nuts)	ESA.STN.M5 4
Weight	90 g
Compatible with:	QC-G50

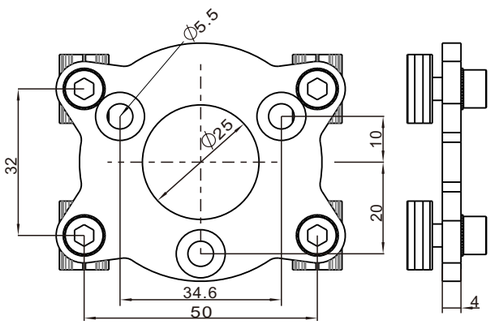



Application example

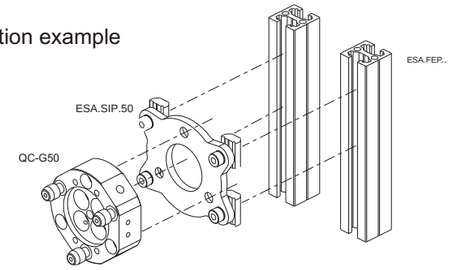

Model	ESA.SIP.90
PN	0247090
	screws Accessorier
(Screws)	ESA.STC.M5.L14 4
(Single hole shim)	ESA.STS.M5 4
T (T-Nuts)	ESA.STN.M5 4
Weight	190 g
Compatible with:	QC-G90

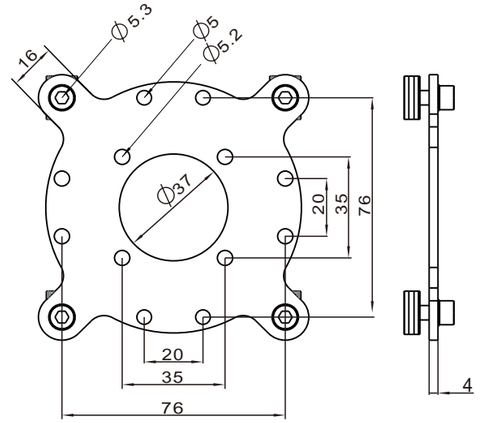



Application example

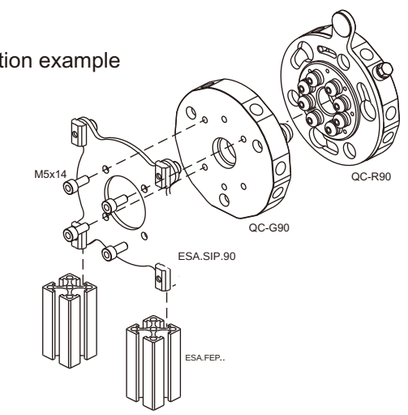

Interface

	Model	ESA.SIP.150
	PN	0244287
		screws Accessorier
	(Screws)	ESA.STC.M5.L14 4
	(Single hole shim)	ESA.STS.M5 4
T	(T-Nuts)	ESA.STN.M5 4
Weight		540g
Compatible with:		QC-G150/QC-G160



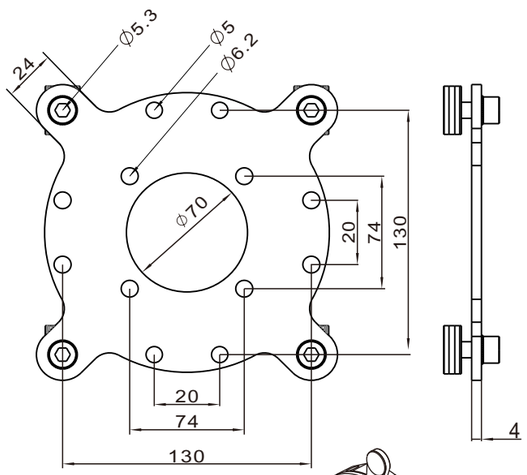

Application example

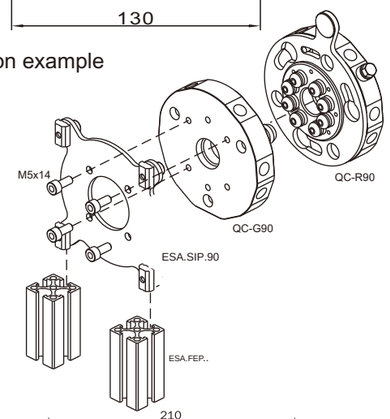

	Model	ESA.SIP.200
	PN	0246139
		screws Accessorier
	(Screws)	ESA.STC.M6.L18 8
	(Single hole shim)	ESA.STS.M6 8
T	(T-Nuts)	ESA.STN.M6 8
Weight		1800g
Compatible with:		QC-G200



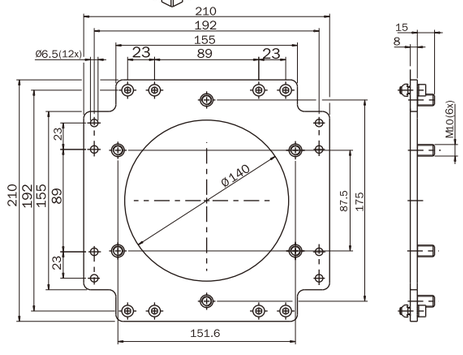

Application example

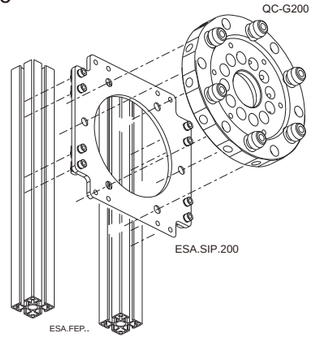

Fitting:Electrical connection module



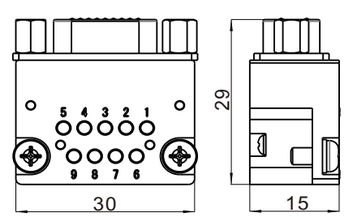

Quick changer

PN	0247125
Model	ESA.QCE.09R

- 10g
- I/O 9 D-SUB 3A
- Weight 10g
- I/O connection type:9 pins D-SUB
- Working Current(MAX):3A





Quick changer

PN	0243915
Model	ESA.LLR.1000

- 24g
- I/O 9 D-SUB 3A
- Weight 24g
- I/O connection type:9 pins D-SUB
- Working Current(MAX):3A



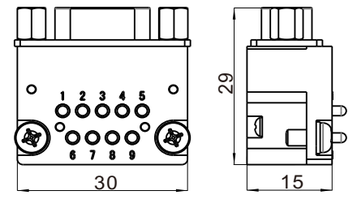

Quick changer

PN	0246176
Model	ESA.QCE.09G

- 10g
- I/O 9 D-SUB 3A
- Weight 10g
- I/O connection type:9 pins D-SUB
- Working Current(MAX):3A





Quick changer

PN	0245875
Model	ESA.LLG.1000

- 24g
- I/O 9 D-SUB 3A
- Weight 24g
- I/O connection type:9 pins D-SUB
- Working Current(MAX):3A

Application example







(Sepro)
Quick changer suit for Sepro

Quick changer

PN	0246286
Model	ESA.BP.90

● 233g ● Weight 233g



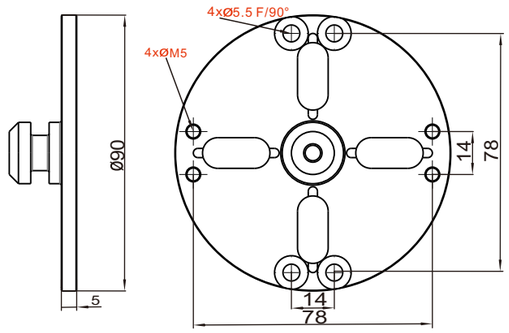

Quick changer

PN	0240686
Model	ESA.BP.120

● 484g ● Weight 484g



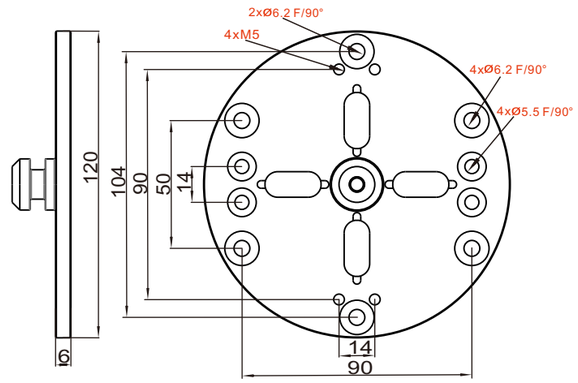

Application example



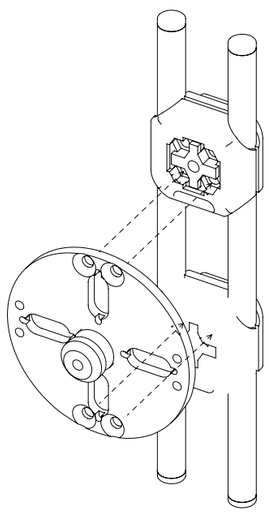

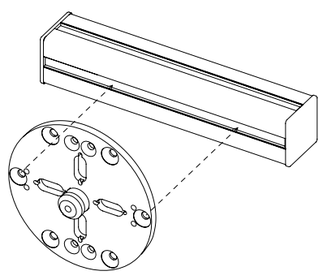

(Sepro)
Quick changer suit for Sepro

Quick changer

PN	0249973
Model	ESA.BP.135

● 677g ● Weight 677g

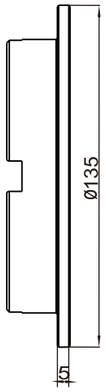

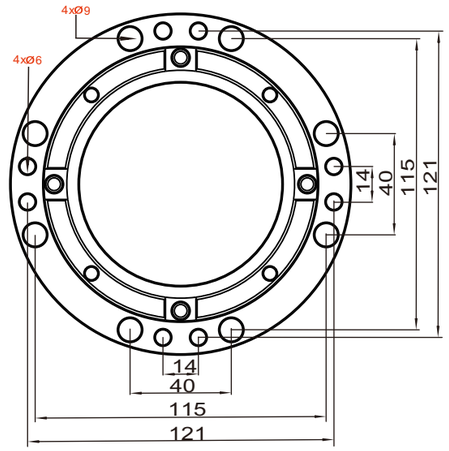



Application example

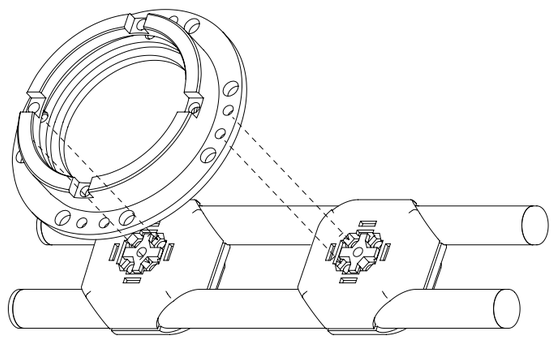



Square Manual Quick changer

Quick changer	
PN	0241526
Model	ESA.SQC.R60

- 148g
- ≤4kg
- Weight 148g
- Loads ≤4kg

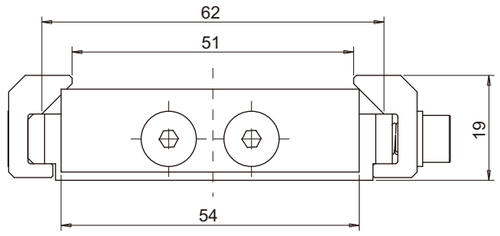

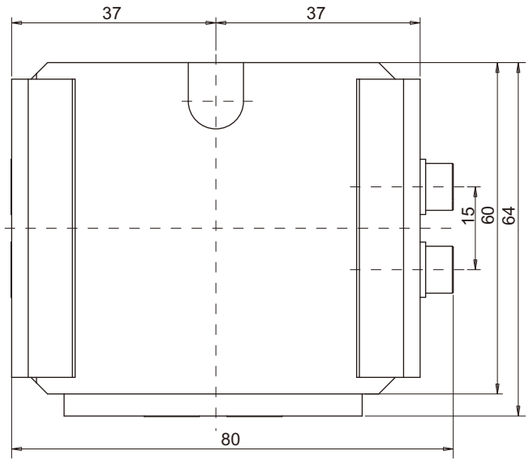

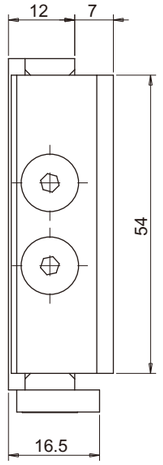



Square Manual Quick changer

Quick changer	
PN	0248002
Model	ESA.SQC.G60

- 79g
- ≤4kg
- Weight 79g
- Loads ≤4kg

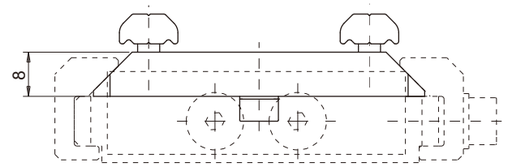

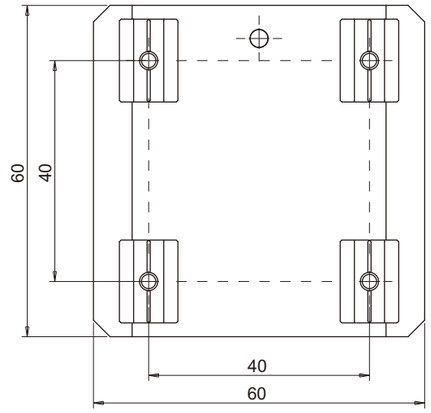

Application example





Square Manual Quick changer

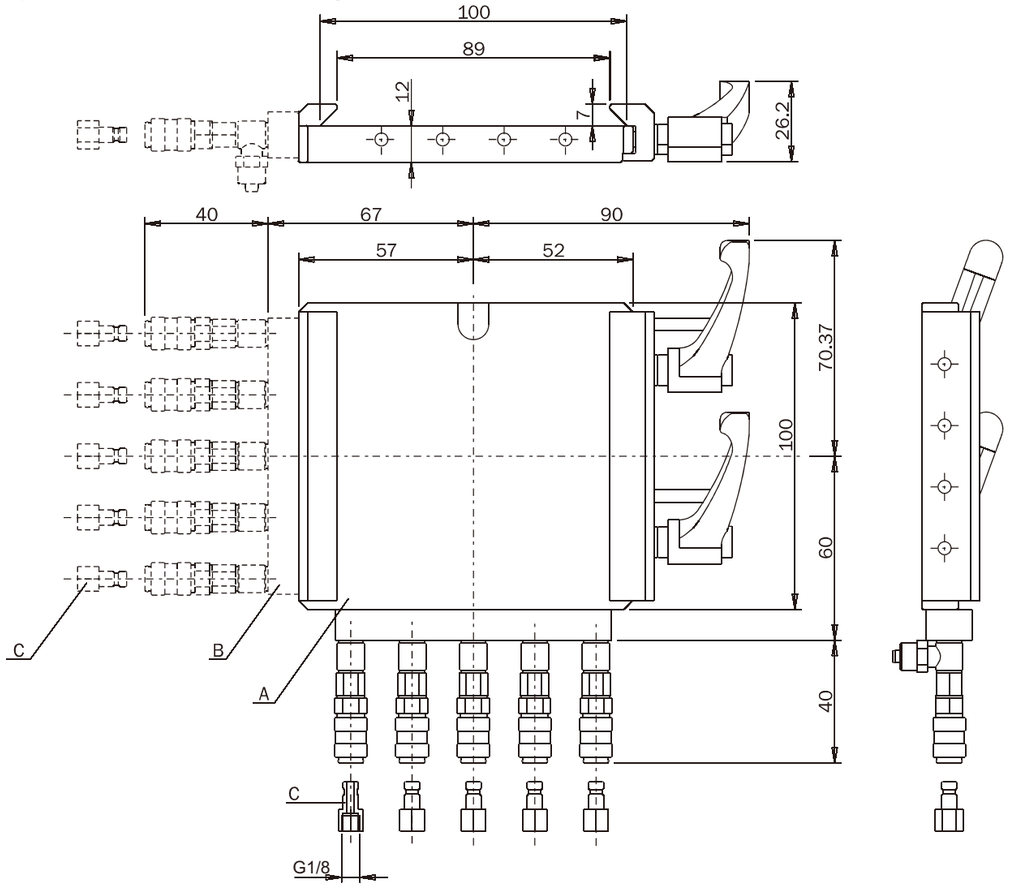

Model	ESA.SQC.R100	ESA.SQC.R100.A05	FT.R100.A06	MS-10PF
PN	0247044	0248880	0243364	0245113
Weight	500 g	620 g	390 g	40 g

● ≤10kg ● Loads ≤10kg



ESA.SQC.R100

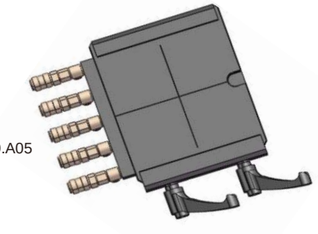

A
ESA.SQC.R100.A05



B
FT.R100.A06



C
MS-10PF

Square Manual Quick changer

Quick changer

PN	0241135
Model	ESA.SQC.G100

● 270g ≤10kg ● Weight 270g Loads ≤10kg

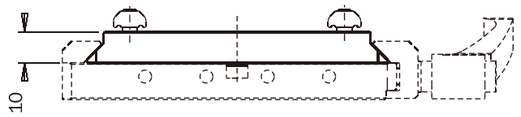

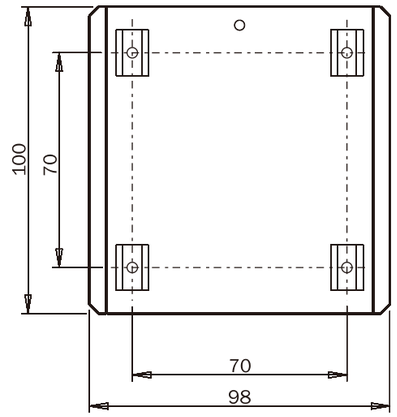



Application example



Square Manual Quick changer

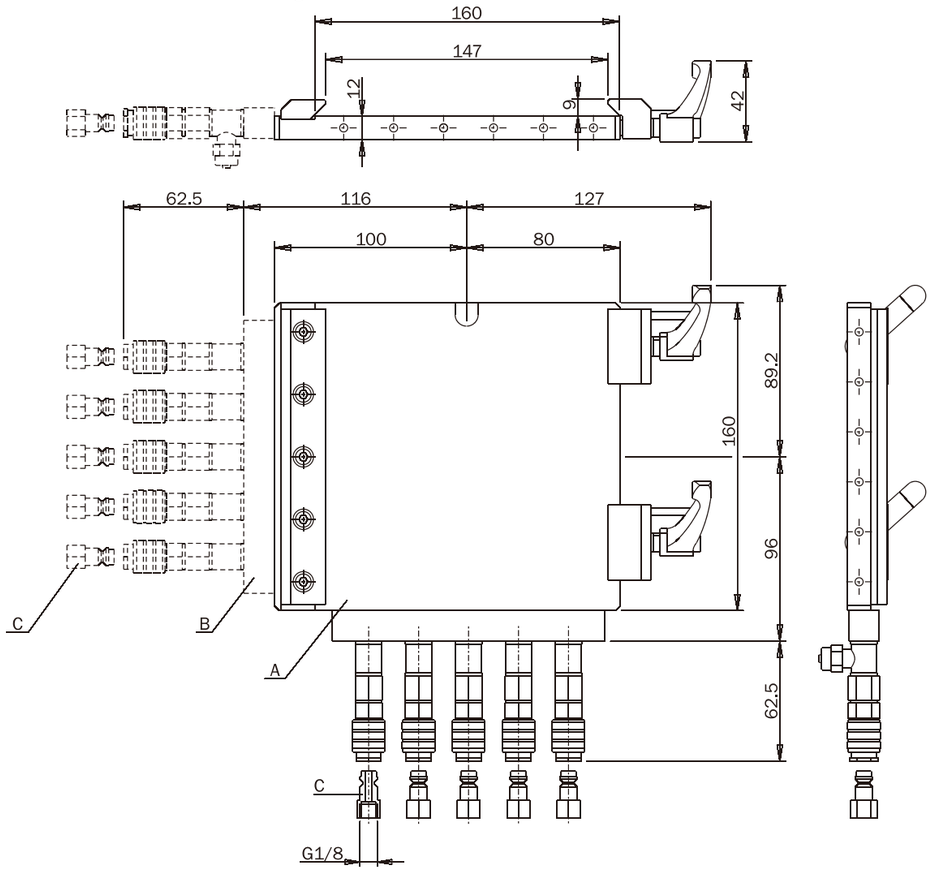

Model	ESA.SQC.R160	ESA.SQC.R160.A05	FT.R160.A06	MS-10PF
PN	0249726	0243349	0246166	0245113
Weight	1270 g	1650 g	450 g	40 g

● ≤20kg ● Loads ≤20kg

ESA.SQC.R160



A
ESA.SQC.R160.A05

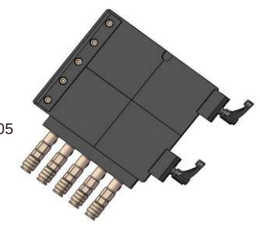

B
FT.R160.A06



C
MS-10PF



Square Manual Quick changer

Quick changer

PN	0243360
Model	ESA.SQC.G160

● 670g ≤20kg ● Weight 670g Loads ≤20kg

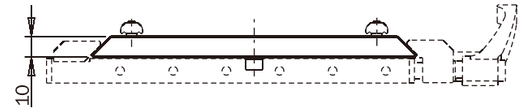

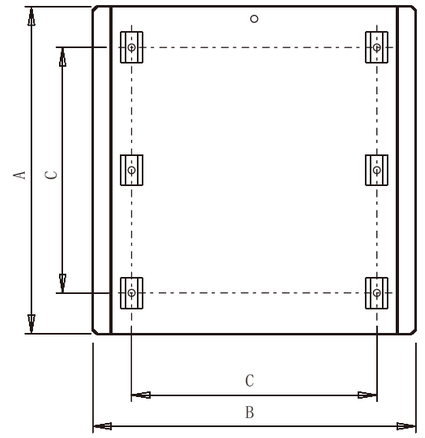

Application example





Square Manual Quick changer

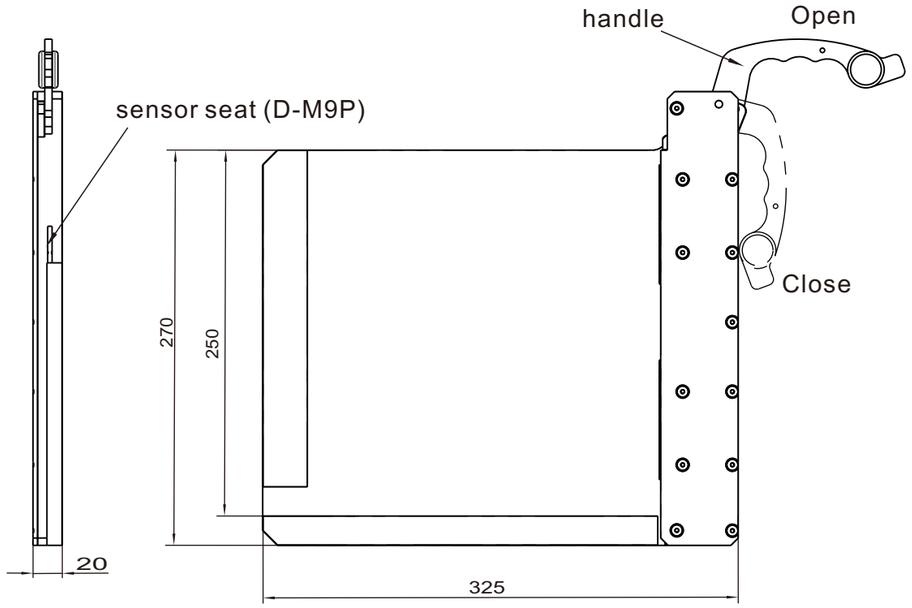

Quick changer

PN	0244978
Model	ESA.SQC.R250
3720g	Weight 3720g
≤40kg	Loads ≤40kg

Open



Close



Square Manual Quick changer

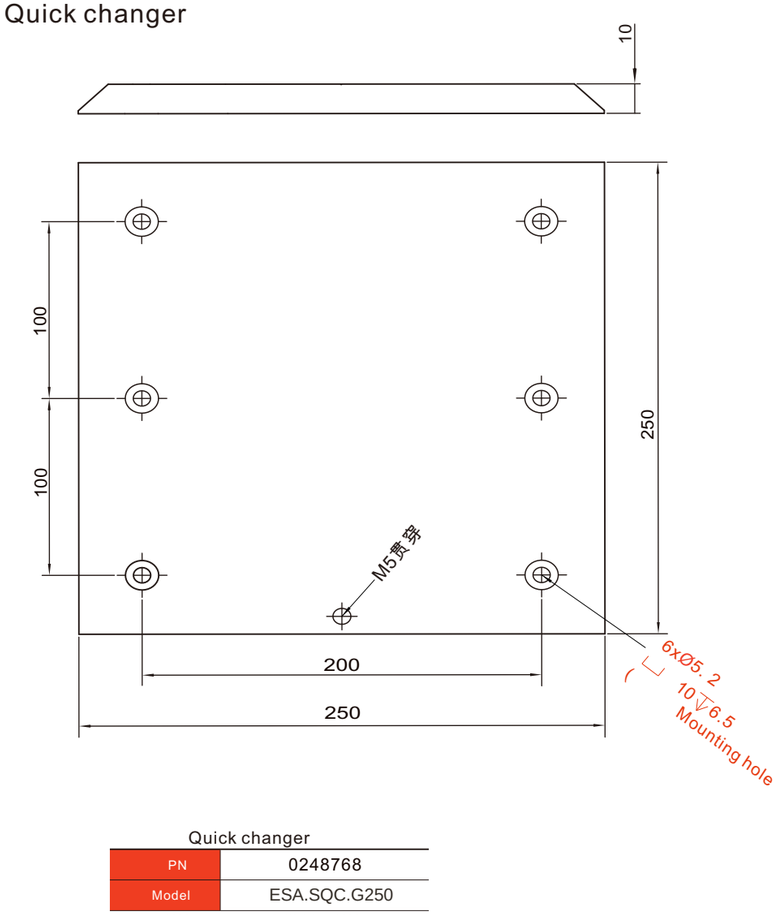

Quick changer

PN	0248768
Model	ESA.SQC.G250
1600g	Weight 1600g
≤40kg	Loads ≤40kg

Application example





Robot Tool Changer

Series:ESA.AQC



The GS-tool quick conversion flexible device enables a single industrial robot to work at multiple stations,improving production efficiency;

All functional mechanisms are made of high-strength steel to ensure safety;

Step steel ball locking, prevent accidental power failure, gas loss caused by tool drop;

Additional installation of various types of circuits, gas, fluid channels, enhance practicability;

Optional sensor, real-time monitoring of the status of the quick change device.

1. Ventilation makes the piston move upward, pulling the ball to the second cone, and producing a strong locking force;
2. Fail-safe backup cone
3. The first cone of the CAM
4. Air for lock
5. Air for unlock
6. Sensor for Tool
7. Sensor for lock
8. Sensor for unlock

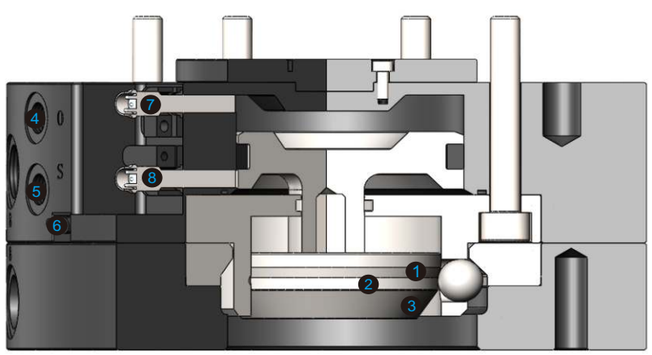

automatic quick change



ESA.AQC.0025
≤25kg



ESA.AQC.0035
≤35kg



ESA.AQC.0050
≤50kg



ESA.AQC.0100
≤100kg

ESA.AQC.0200
≤200kg

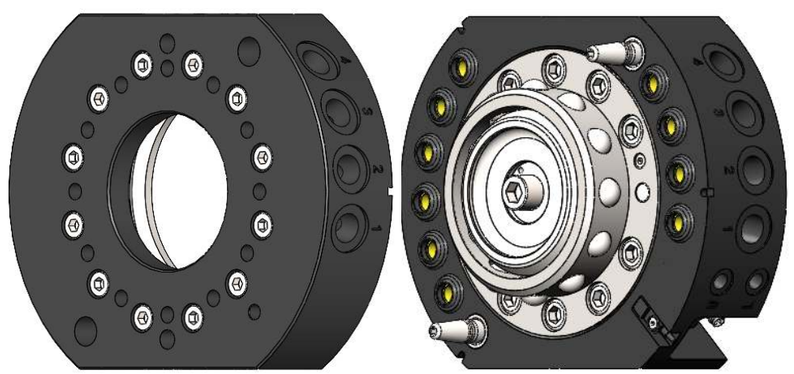

Quick changer
Eoat components
Gripp components
Vacuum components
Fitting
AIR NIPPERS
STATIC SOLUTIONS

ESA.AQC.R0025 Robot side

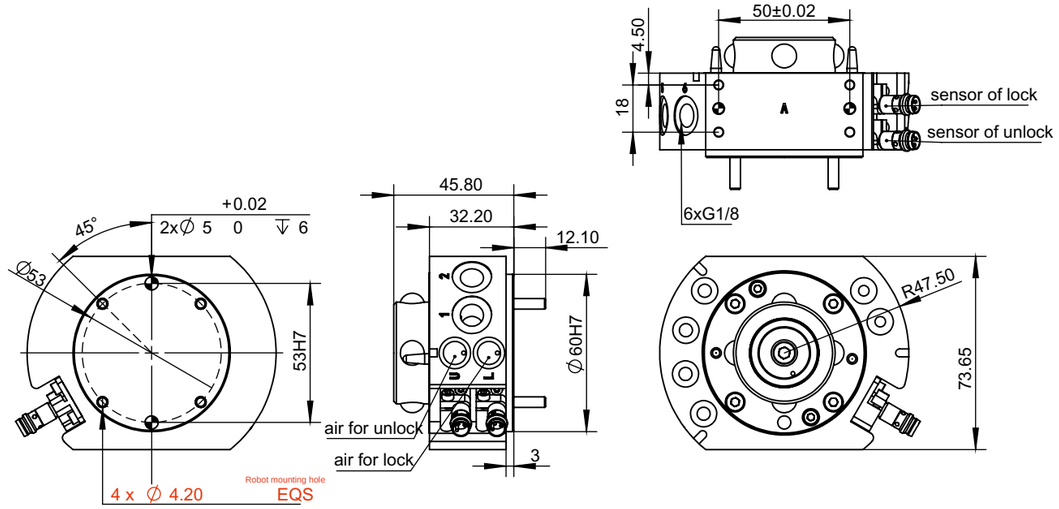

ESA.AQC.G0025 Tool side

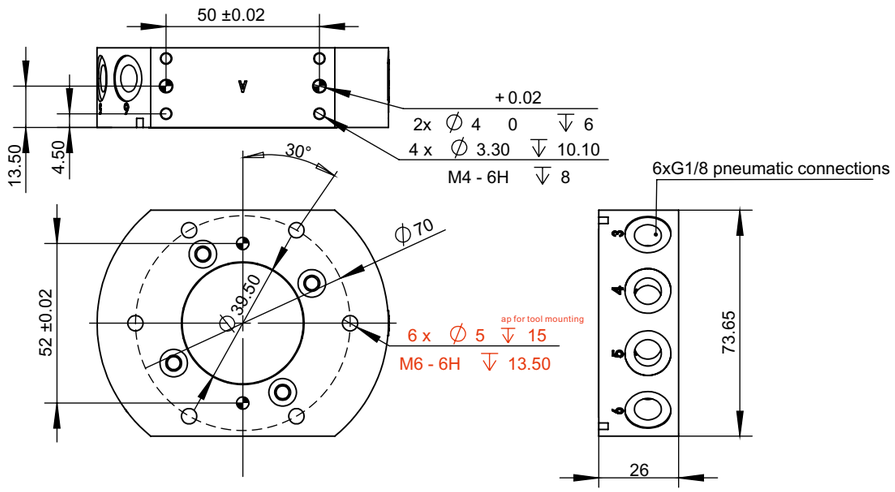

Quick changer

PN	0249288
Model	ESA.AQC.R0025

● 870g ● Weight 870g

Quick changer

PN	0242264
Model	ESA.AQC.G0025

● 550g ● Weight 550g

Material	Body	AL alloy	Model	Robot side	ESA.AQC.R0025
	functional mechanisms	Steel alloy		Tool adapter	ESA.AQC.G0025
Weight	Robot side	0.87kg	Load	Recommended load	25kg
	Tool adapter	0.55kg		Locking force	2300N
Air pressure		0.5-0.8Mpa		Static Load torque (X&Y)	169.5Nm
Min./max. ambient temperature		5-60°		Static Load torque (Z)	230Nm
Humidity		0-90%	Repeatability accuracy		±0.015mm
Air passage		6xG1/8	Maximum allowable angle deviation		±1°
Open Lock		2xG1/8	Max. distance when locking		2mm

ESA.AQC.R0035 Robot side

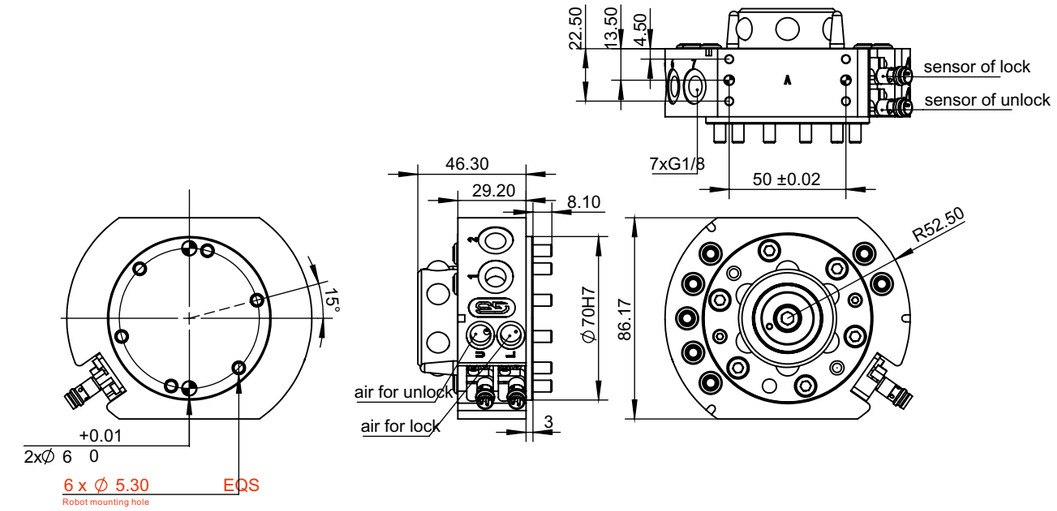

ESA.AQC.G0035 Tool side

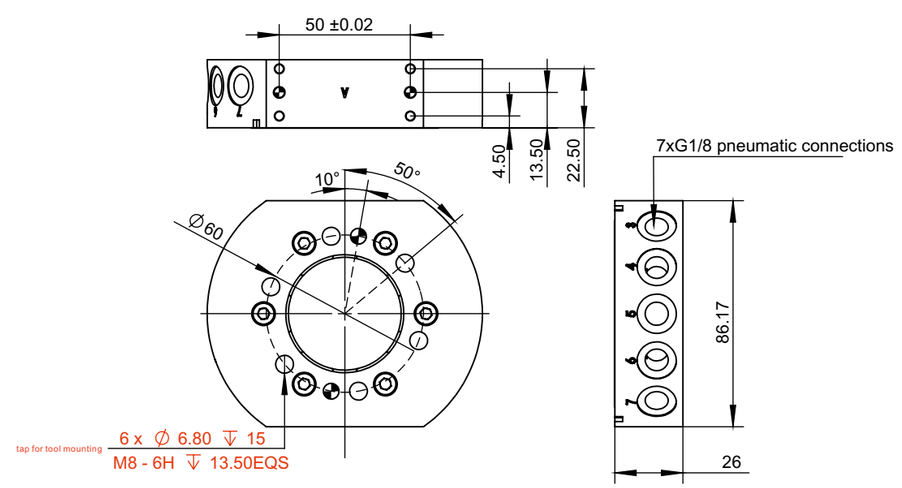

Quick changer

PN	0241613
Model	ESA.AQC.R0035

● 950g ● Weight 950g

Quick changer

PN	0243115
Model	ESA.AQC.G0035

● 600g ● Weight 600g

Material	Body	AL alloy	Model	Robot side	ESA.AQC.R0035
	functional mechanisms	Steel alloy		Tool adapter	ESA.AQC.G0035
Weight	Robot side	0.95kg	Load	Recommended load	35kg
	Tool adapter	0.6kg		Locking force	2850N
Air pressure		0.5-0.8Mpa		Static Load torque (X&Y)	169.5Nm
Min./max. ambient temperature		5-60°		Static Load torque (Z)	230Nm
Humidity		0-90%	Repeatability accuracy		±0.015mm
Air passage		7xG1/8	Maximum allowable angle deviation		±1°
Open Lock		2xG1/8	Max. distance when locking		2mm

ESA.AQC.R0050 Robot side

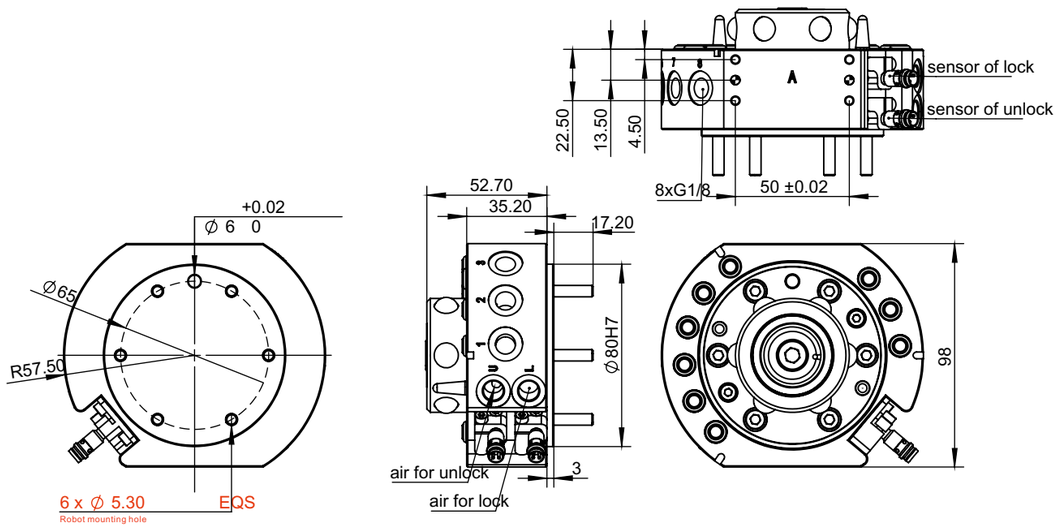

ESA.AQC.G0050 Tool side

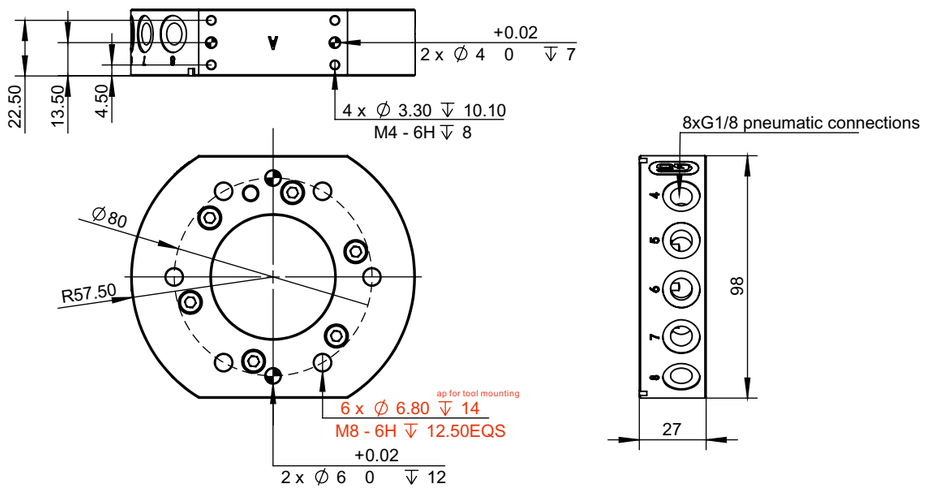

Quick changer

PN	0246840
Model	ESA.AQC.R0050

● 1100g ● Weight 1100g

Quick changer

PN	0240343
Model	ESA.AQC.G0050

● 550g ● Weight 550g

Material	Body	AL alloy	Model	Robot side	ESA.AQC.R0050
	functional mechanisms	Steel alloy		Tool adapter	ESA.AQC.G0050
Weight	Robot side	1.1kg	Load	Recommended load	50kg
	Tool adapter	0.7kg		Locking force	4600N
Air pressure		0.5-0.8Mpa		Static Load torque (X&Y)	471Nm
Min./max. ambient temperature		5-60°		Static Load torque (Z)	648Nm
Humidity		0-90%	Repeatability accuracy		±0.015mm
Air passage		8xG1/8	Maximum allowable angle deviation		±1°
Open Lock		2xG1/8	Max. distance when locking		2mm

ESA.AQC.R0100 Robot side

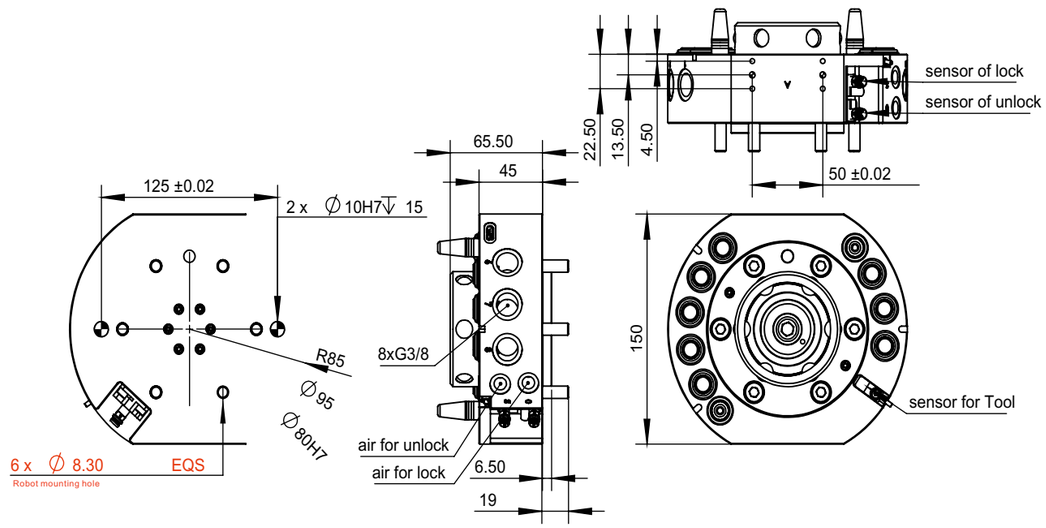

ESA.AQC.G0100 Tool side

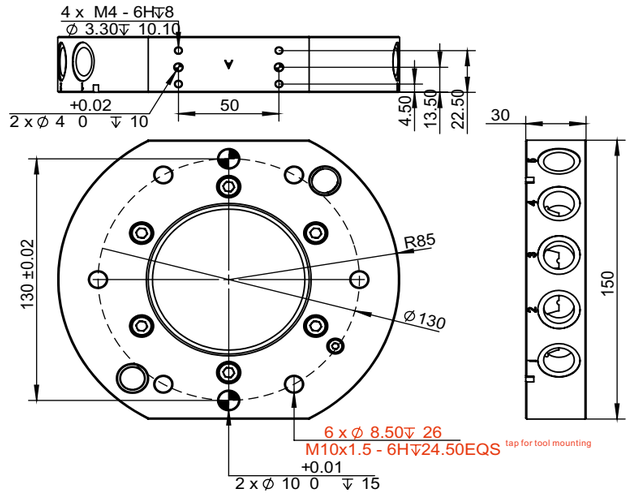

Quick changer

PN	0247671
Model	ESA.AQC.R0100

● 3600g ● Weight 3600g

Quick changer

PN	0246553
Model	ESA.AQC.G0100

● 1700g ● Weight 1700g

Material	Body	AL alloy	Model	Robot side	ESA.AQC.R0100
	functional mechanisms	Steel alloy		Tool adapter	ESA.AQC.G0100
Weight	Robot side	3.6kg	Load	Recommended load	100kg
	Tool adapter	1.7kg		Locking force	12000N
Air pressure		0.5-0.8Mpa		Static Load torque (X&Y)	538Nm
Min./max. ambient temperature		5-60°		Static Load torque (Z)	720Nm
Humidity		0-90%	Repeatability accuracy		±0.015mm
Air passage		8xG3/8	Maximum allowable angle deviation		±1°
Open Lock		2xG1/8	Max. distance when locking		2mm

ESA.AQC.R0200 Robot side

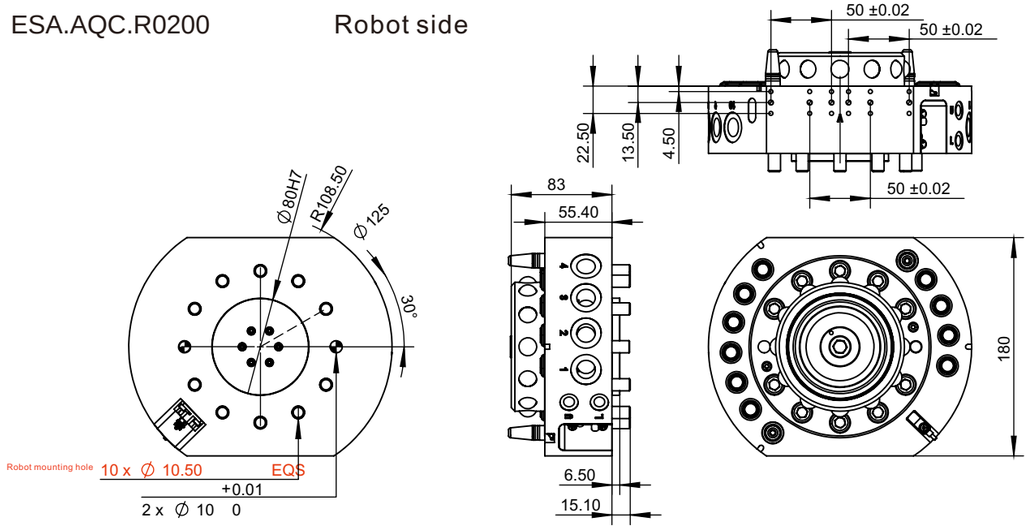

GSA-G0200 Tool side

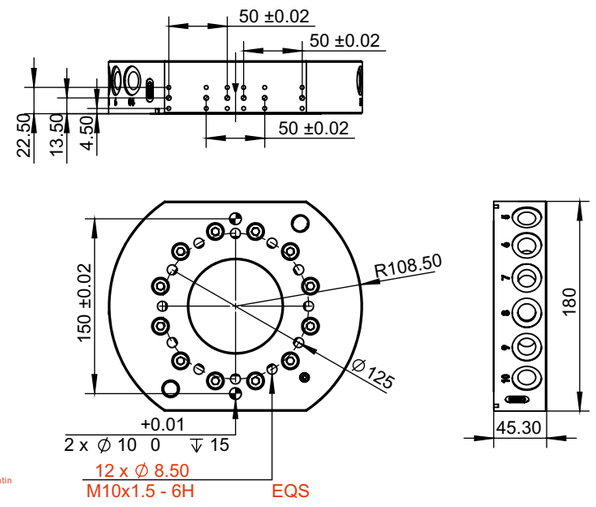

Quick changer

PN	0244183
Model	ESA.AQC.R0200

● 6500g ● Weight 6500g

Quick changer

PN	0249111
Model	ESA.AQC.G0200

● 3000g ● Weight 3000g

Material	Body	AL alloy	Model	Robot side	ESA.AQC.R0200
	functional mechanisms	Steel alloy		Tool adapter	ESA.AQC.G0200
Weight	Robot side	6.5kg	Load	Recommended load	200kg
	Tool adapter	3kg		Locking force	16000N
Air pressure		0.5-0.8Mpa		Static Load torque (X&Y)	1360Nm
Min./max. ambient temperature		5-60°		Static Load torque (Z)	1130Nm
Humidity		0-90%	Repeatability accuracy		±0.015mm
Air passage		10xG3/8	Maximum allowable angle deviation		±1°
Open Lock		2xG1/8	Max. distance when locking		2mm

electrical module

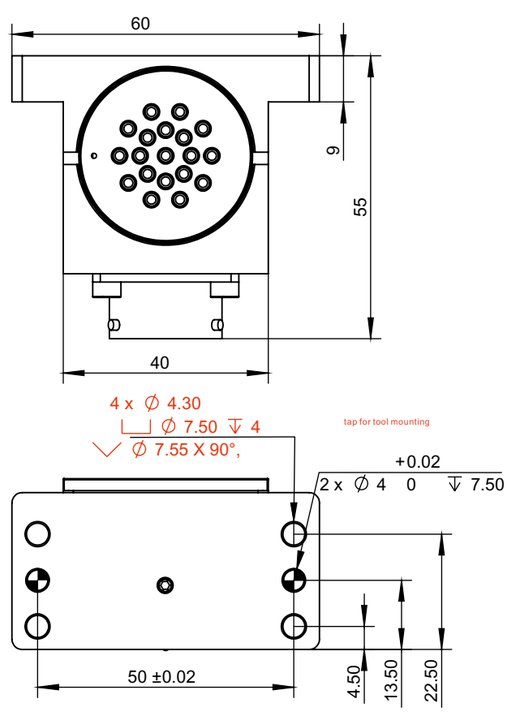

ESA.AEM.G019

electrical module

PN	0245352
Model	ESA.AEM.G019
Compatible with:	ESA.AQC.G0025 ESA.AQC.G0035 ESA.AQC.G0050 ESA.AQC.G0100 ESA.AQC.G0200

● 130g ● Weight 130g
● 220V ● Working Voltage(MAX):220V
● 3A ● Working Current(MAX):3A

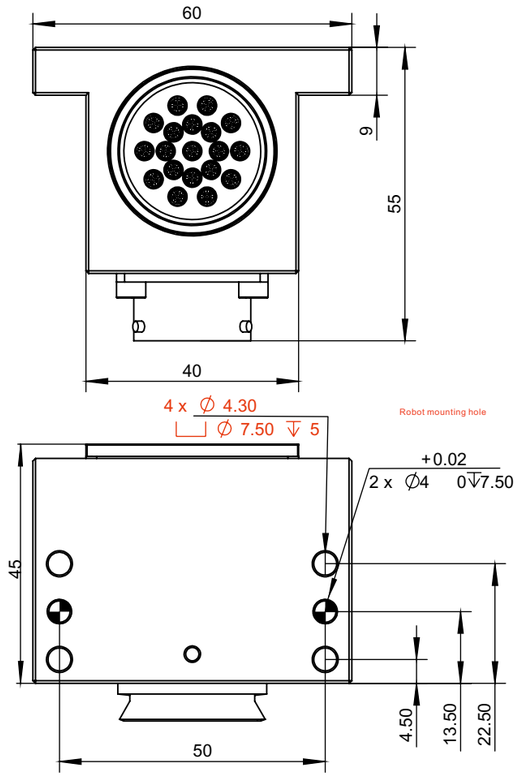

ESA.AEM.R019

electrical module

PN	0242948
Model	ESA.AEM.R019
Compatible with:	ESA.AQC.R0025 ESA.AQC.R0035 ESA.AQC.R0050 ESA.AQC.R0100 ESA.AQC.R0200

● 180g ● Weight 180g
● 220V ● Working Voltage(MAX):220V
● 3A ● Working Current(MAX):3A
● 19 ● Pin:19

Application example



Pneumatic module

Robot side

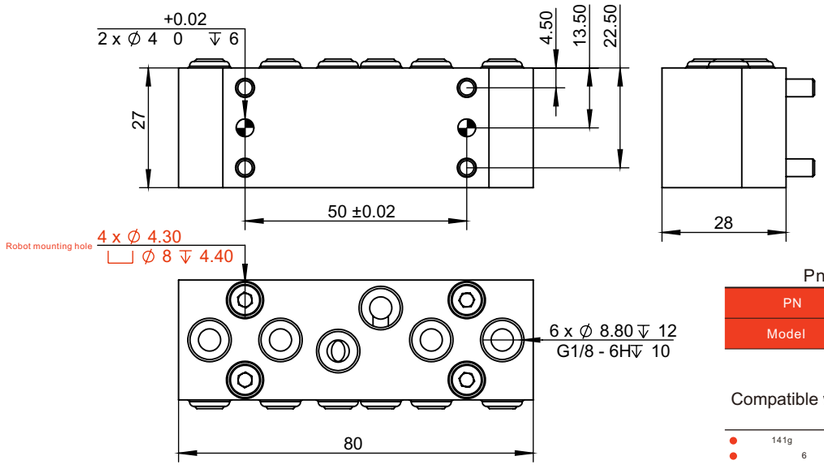

Pneumatic module	
PN	0245768
Model	ESA.APM.R006
Compatible with:	ESA.AQC.R0025 ESA.AQC.R0035 ESA.AQC.R0050 ESA.AQC.R0100 ESA.AQC.R0200
141g	Weight 141g
6	Expand the air passage:6

Tool side

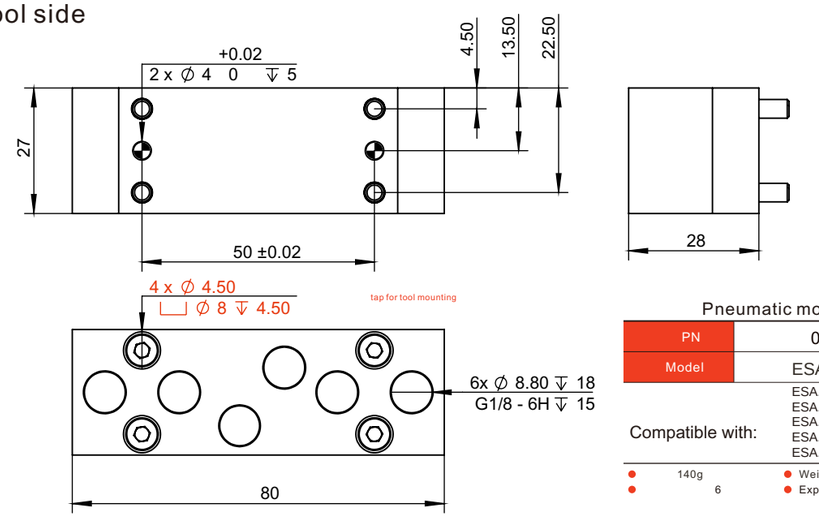

Pneumatic module	
PN	0243509
Model	ESA.APM.G006
Compatible with:	ESA.AQC.G0025 ESA.AQC.G0035 ESA.AQC.G0050 ESA.AQC.G0100 ESA.AQC.G0200
140g	Weight 140g
6	Expand the air passage:6

Application example

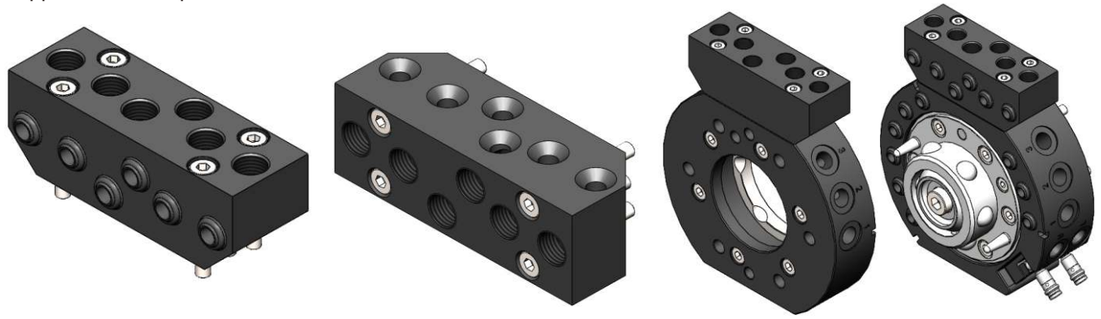

Square automatic quick change



Medium	Filtered compressed air					
Pressure range	5~6 bar					
Temperature range	5 ~ 60 °C					
Robot side quick changer	ESA.AQC.R003S	ESA.AQC.R005S	ESA.AQC.R010S	ESA.AQC.R015S	ESA.AQC.R035S	ESA.AQC.R080S
Robot side quick changer weight	330 g	305 g	475 g	845 g	1290 g	2720 g
Grippersidequickchanger	ESA.AQC.G003S	ESA.AQC.G005S	ESA.AQC.G010S	ESA.AQC.G015S	ESA.AQC.G035S	ESA.AQC.G080S
Gripper side quick changer	120 g	122 g	235 g	365g	615 g	1385 g
Recomended payload	3kg	5kg	10kg	15kg	35kg	80kg

Round automatic quick change

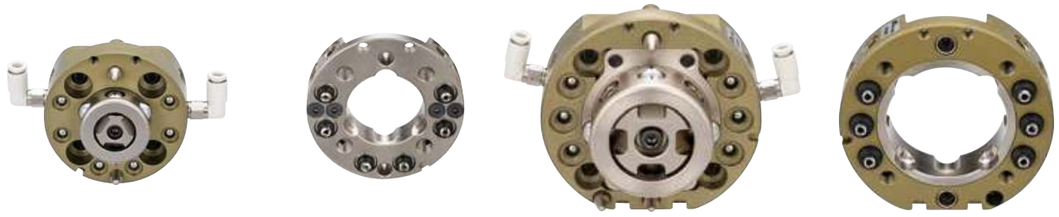

Medium	Filtered compressed air				
Pressure range	5~6 bar				
Temperature range	5 ~ 60 °C				
Robot side quick changer	ESA.AQC.R005R	ESA.AQC.R010R	ESA.AQC.R020R	ESA.AQC.R035R	ESA.AQC.R060R
Robot side quick changer weight	250 g	199 g	561 g	1225 g	1440 g
Grippersidequickchanger	ESA.AQC.G005R	ESA.AQC.G010R	ESA.AQC.G020R	ESA.AQC.G035R	ESA.AQC.G060R
Gripper side quick changer	115 g	115 g	229 g	545g	734 g
Recomended payload	5kg	10kg	20kg	35kg	60kg

Square automatic quick change

ESA.AQC.R003S Robot side

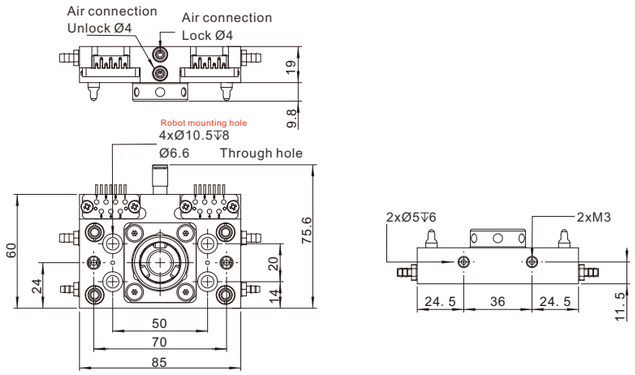

Quick changer	
PN	0244614
Model	ESA.AQC.SR003

- 133g
- ≤3kg
- 4
- Weight 133g
- Loads ≤3kg
- pneumatic connections:4

ESA.AQC.G003S Tool side

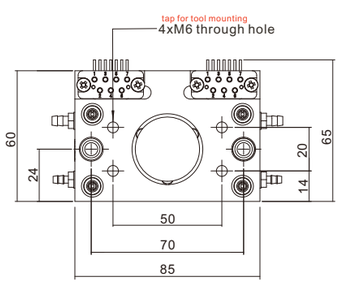

Quick changer	
PN	0242231
Model	ESA.AQC.SG003

- 120g
- ≤3kg
- 4
- Weight 120g
- Loads ≤3kg
- pneumatic connections:4

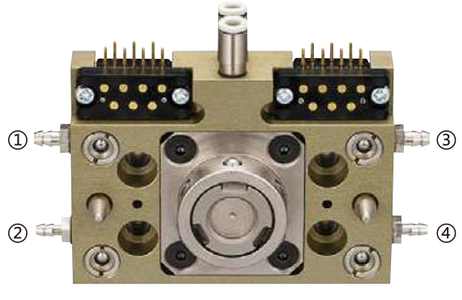

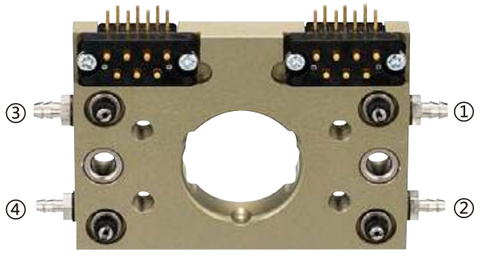

Square automatic quick change

ESA.AQC.R005S Robot side

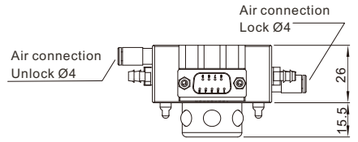

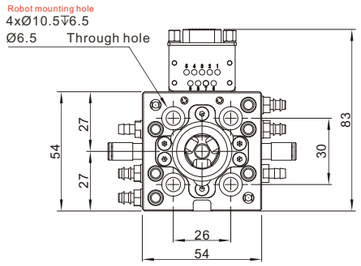

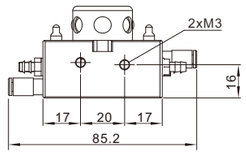

Quick changer	
PN	0248886
Model	ESA.AQC.SR005

- 305g
- ≤5kg
- 6
- Weight 305g
- Loads ≤5kg
- pneumatic connections:6

ESA.AQC.G005S Tool side

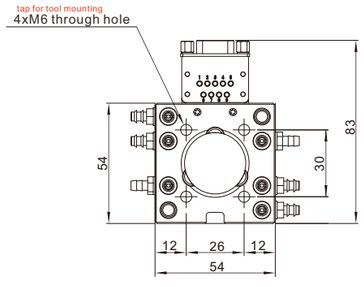

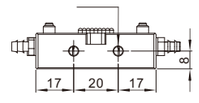

Quick changer	
PN	0246408
Model	ESA.AQC.SG005

- 122g
- ≤5kg
- 6
- Weight 122g
- Loads ≤5kg
- pneumatic connections:6

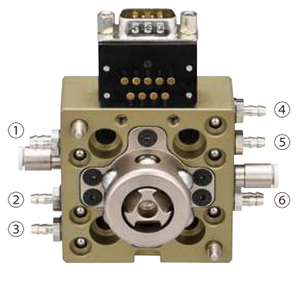

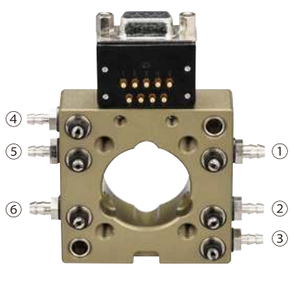

Square automatic quick change

ESA.AQC.R010S Robot side

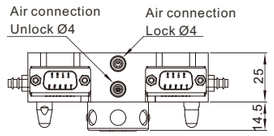

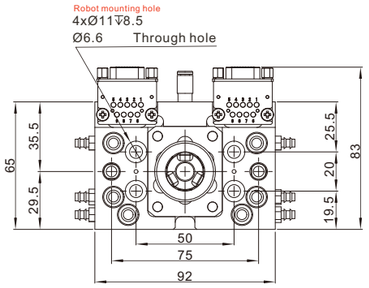

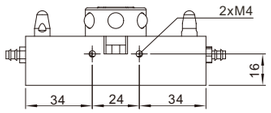

Quick changer	
PN	0249112
Model	ESA.AQC.R010S

- 475g
- ≤10kg
- 6
- Weight 475g
- Loads ≤10kg
- pneumatic connections:6

ESA.AQC.G010S Tool side

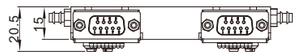

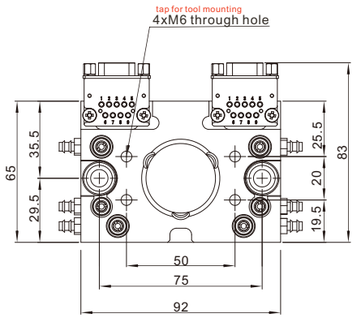

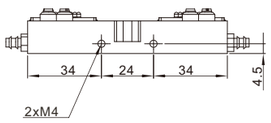

Quick changer	
PN	0244806
Model	ESA.AQC.G010S

- 235g
- ≤10kg
- 6
- Weight 235g
- Loads ≤10kg
- pneumatic connections:6



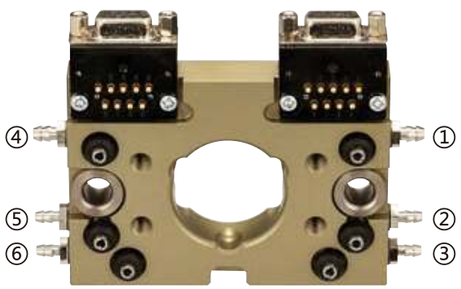

Square automatic quick change

ESA.AQC.R015S Robot side

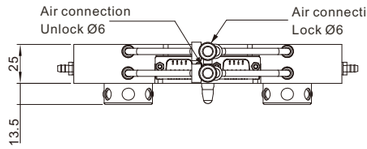

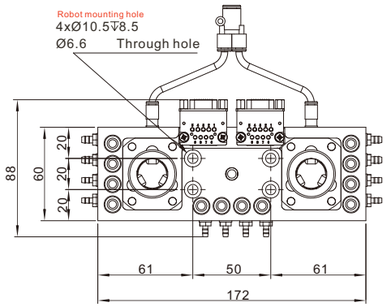

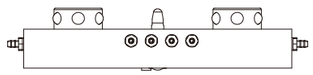

Quick changer	
PN	0248635
Model	ESA.AQC.R015S

- 845g
- ≤15kg
- 12
- Weight 845g
- Loads ≤15kg
- pneumatic connections:12

ESA.AQC.G015S Tool side

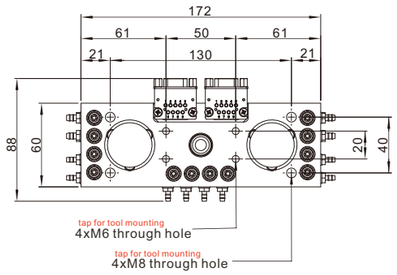



Quick changer	
PN	0241592
Model	ESA.AQC.G015S

- 365g
- ≤15kg
- 12
- Weight 365g
- Loads ≤15kg
- pneumatic connections:12

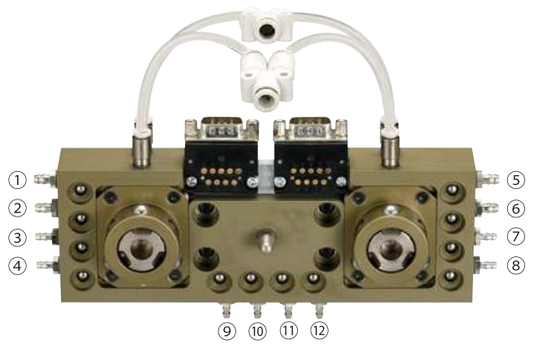



Square automatic quick change

ESA.AQC.R035S Robot side

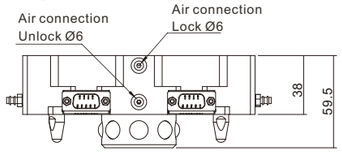

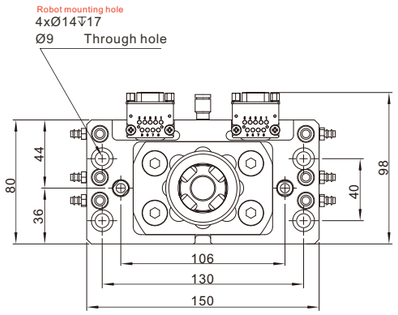

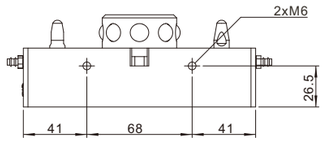

Quick changer	
PN	0246046
Model	ESA.AQC.R035S

- 1290g
- ≤35kg
- 6
- Weight 1290g
- Loads ≤35kg
- pneumatic connections:6

ESA.AQC.G035S Tool side

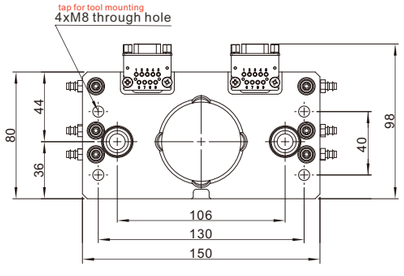

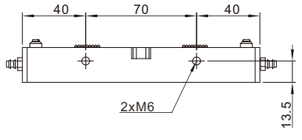

Quick changer	
PN	0242811
Model	ESA.AQC.G035S

- 615g
- ≤35kg
- 6
- Weight 615g
- Loads ≤35kg
- pneumatic connections:6





Square automatic quick change

ESA.AQC.R080S Robot side

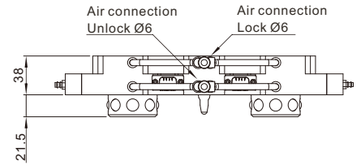

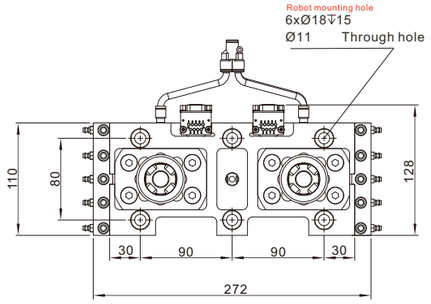

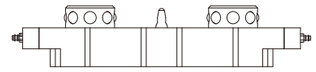

Quick changer	
PN	0246209
Model	ESA.AQC.R080S

- 2720g
- ≤80kg
- 10
- Weight 2720g
- Loads ≤80kg
- pneumatic connections:10

ESA.AQC.G080S Tool side

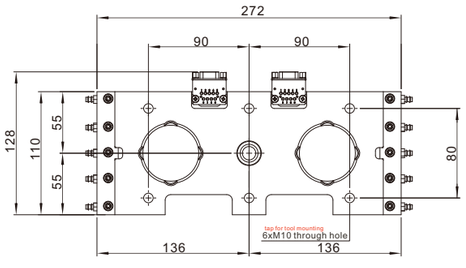

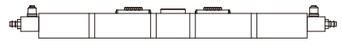

Quick changer	
PN	0241873
Model	ESA.AQC.G080S

- 1385g
- ≤80kg
- 10
- Weight 1385g
- Loads ≤80kg
- pneumatic connections:10

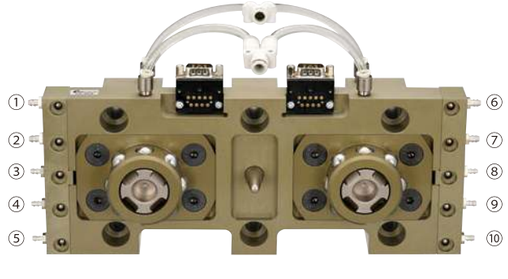

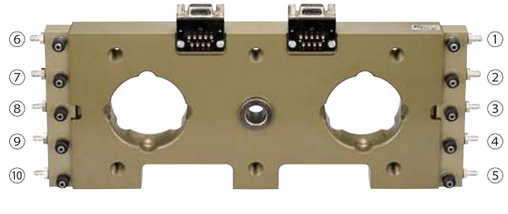

Additional air expansion

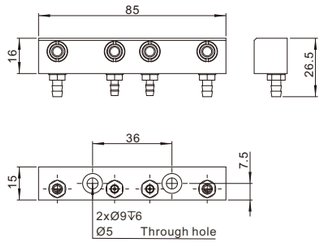

Additional air expansion	
PN	0246678
Model	ESA.APM.SR003

- 56g
- Weight 56g
- ESA.AQC.R003S
- Compatible with: ESA.AQC.R003S

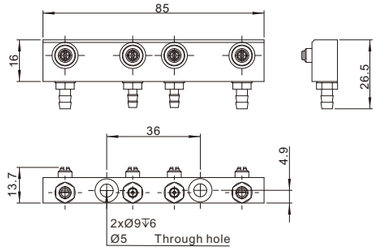

Additional air expansion	
PN	0241872
Model	ESA.APM.SG003

- 33g
- Weight 33g
- ESA.AQC.G003S
- Compatible with: ESA.AQC.G003S

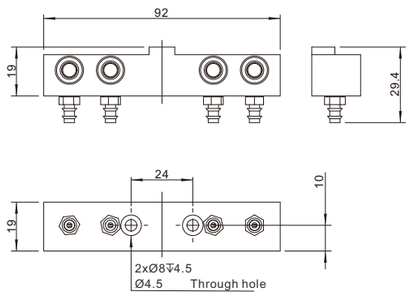

Additional air expansion	
PN	0240051
Model	ESA.APM.SR010

- 90g
- Weight 90g
- ESA.AQC.R010S
- Compatible with ESA.AQC.R010S

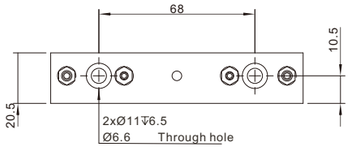

Additional air expansion	
PN	0249732
Model	ESA.APM.SR035

- 115g
- Weight 115g
- ESA.AQC.R035S
- Compatible with:ESA.AQC.R035S

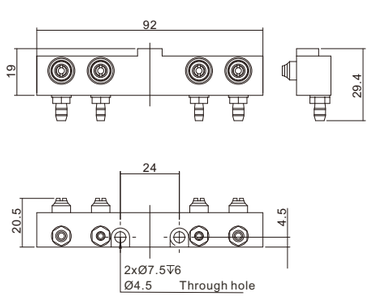

Additional air expansion	
PN	0246525
Model	ESA.APM.SG010

- 70g
- Weight 70g
- ESA.AQC.G010S
- Compatible with:ESA.AQC.G010S

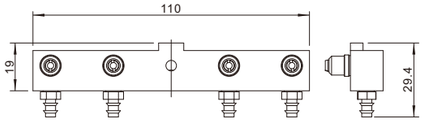

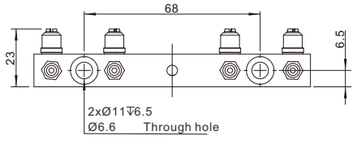

Additional air expansion	
PN	0244067
Model	ESA.APM.SG035

- 82g
- Weight 82g
- ESA.AQC.G035S
- Compatible with:ESA.AQC.G035S







Round automatic quick change

ESA.AQC.R005R Robot side

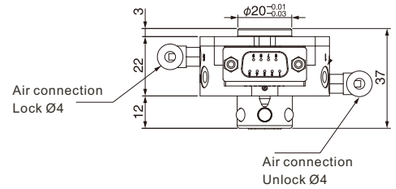

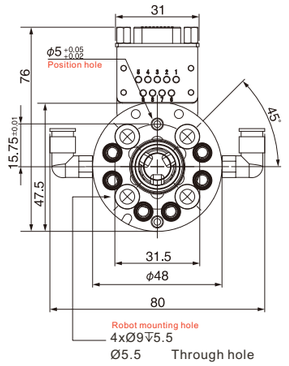

Quick changer	
PN	0245226
Model	ESA.AQC.R005R

- 250g
- Weight 250g
- ≤5kg
- Loads ≤5kg
- 6xM5
- pneumatic connections:6xM5

ESA.AQC.G005 R Tool side

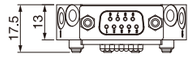

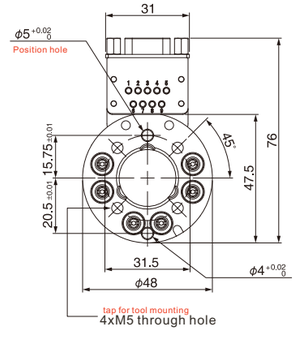

Quick changer	
PN	0243782
Model	ESA.AQC.G005R

- 115g
- Weight 115g
- ≤5kg
- Loads ≤5kg
- 6xM5
- pneumatic connections:6xM5





Round automatic quick change

ESA.AQC.R010R Robot side

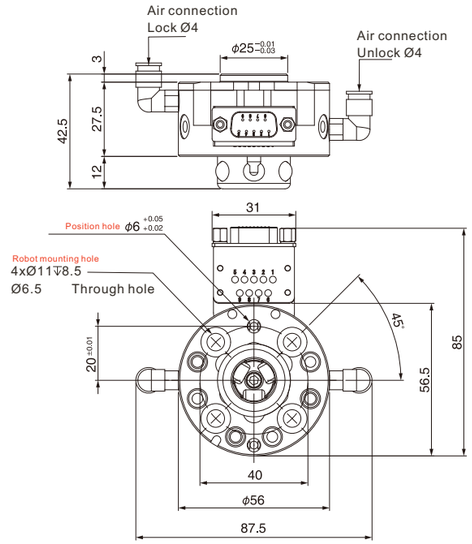

Quick changer

PN	0247420
Model	ESA.AQC.R010R

- 199g
- ≤10kg
- 6xM5
- Weight 199g
- Loads ≤10kg
- pneumatic connections:6xM5

ESA.AQC.G010R Tool side

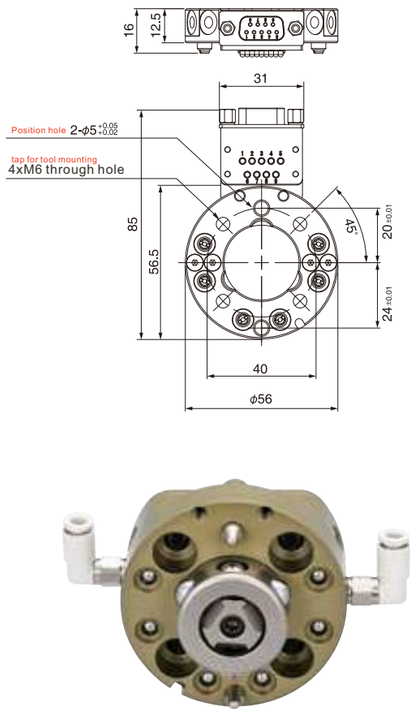

Quick changer

PN	0248089
Model	ESA.AQC.G010R

- 115g
- ≤10kg
- 6xM5
- Weight 115g
- Loads ≤10kg
- pneumatic connections:6xM5



Quick changer
Eoat components
Gripp components
Vacuum components
Fitting
AIR NIPPERS
STATIC SOLUTIONS

Round automatic quick change

ESA.AQC.R020R Robot side

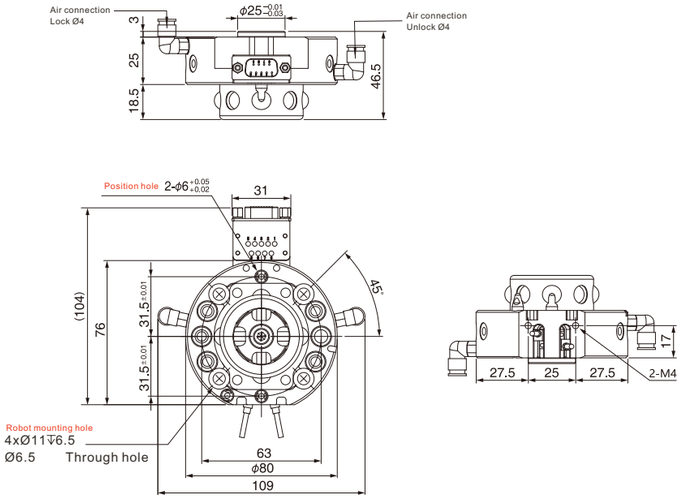

Quick changer

PN	0244413
Model	ESA.AQC.R020R

- 507g
- ≤20kg
- 6xM5
- Weight 507g
- Loads ≤20kg
- pneumatic connections:6xM5

ESA.AQC.G020R Tool side

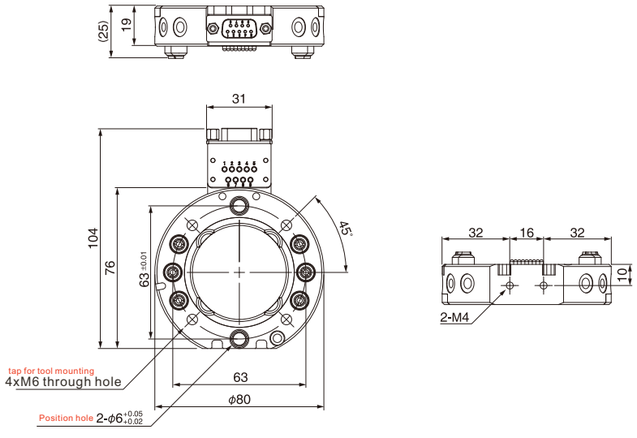

Quick changer

PN	0245135
Model	ESA.AQC.G020R

- 226g
- ≤20kg
- 6xM5
- Weight 226g
- Loads ≤20kg
- pneumatic connections:6xM5





Round automatic quick change

ESA.AQC.R035R Robot side

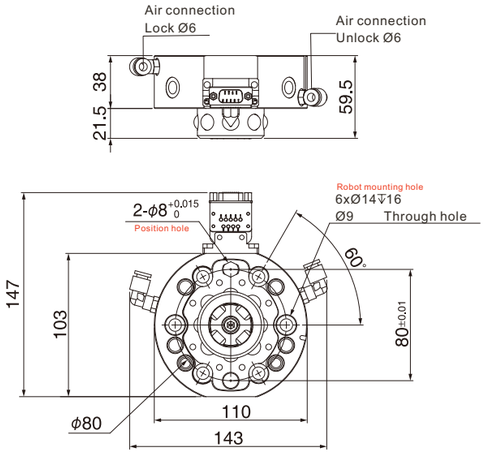

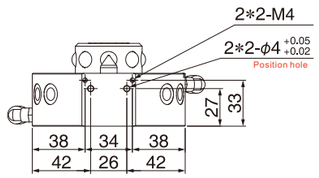

Quick changer	
PN	0240377
Model	ESA.AQC.R035R

- 1225g
- ≤35kg
- 6xG1/8
- Weight 1225g
- Loads ≤35kg
- pneumatic connections:6xG1/8

ESA.AQC.G035R Tool side

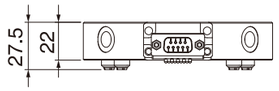

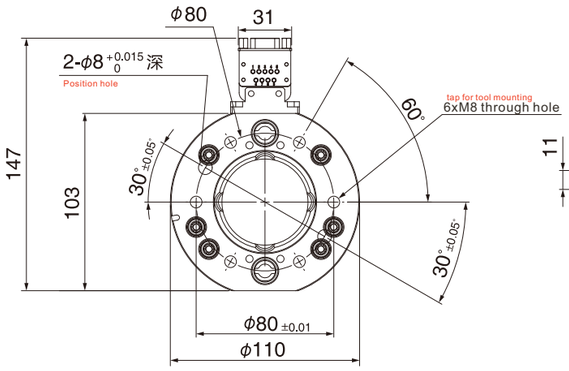

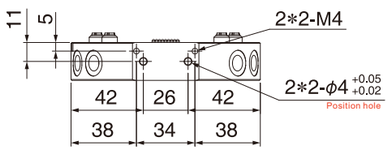

Quick changer	
PN	0240919
Model	ESA.AQC.G035R

- 545g
- ≤35kg
- 6xG1/8
- Weight 545g
- Loads ≤35kg
- pneumatic connections:6xG1/8





Round automatic quick change

ESA.AQC.R060R Robot side

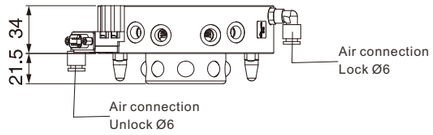

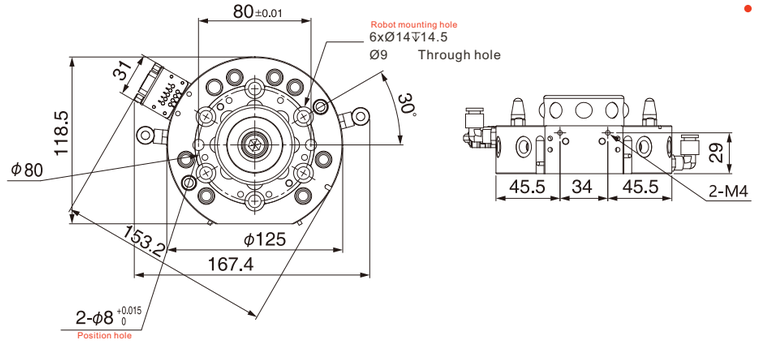

Quick changer	
PN	0249710
Model	ESA.AQC.R060R

- 1440g
- ≤60kg
- 8xG1/8
- Weight 1440g
- Loads ≤60kg
- pneumatic connections:8xG1/8

ESA.AQC.G060R Tool side

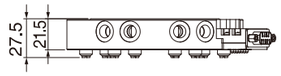

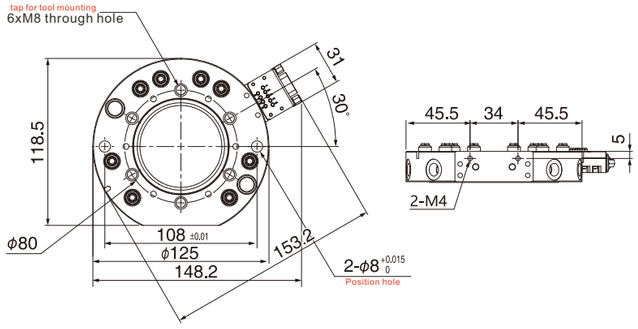

Quick changer	
PN	0244020
Model	ESA.AQC.G060R

- 734g
- ≤60kg
- 8xG1/8
- Weight 734g
- Loads ≤60kg
- pneumatic connections:8xG1/8

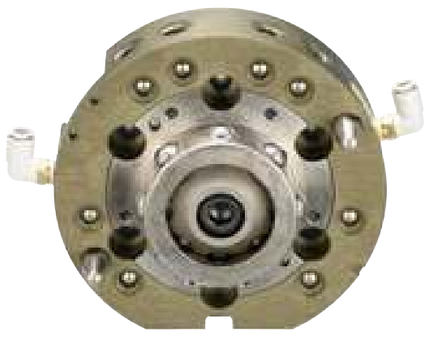



SUS Tube



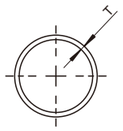

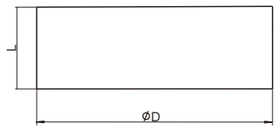



PN	Model	A [mm]	B [mm]	T [mm]	Weight	End cup PN		End cup Model
0242746	ESA.SUS.08.0500		500		58g			
0241073	ESA.SUS.08.1000	Ø8	1000	0.6	116g	0242057(	Red)	End cup.08RD
0240141	ESA.SUS.08.1500		1500		174g			
0245170	ESA.SUS.12.0500		500		90g	0246695(	GY)	End cup.12GY
0240258	ESA.SUS.12.1000	Ø12	1000	0.6	180g	0241509(	BU)	End cup.12BU
0243842	ESA.SUS.12.1500		1500		270g	0249482(	BL)	End cup.12BL
0248416	ESA.SUS.20.0500		500		200g	0242689(	GY)	End cup.20GY
0243089	ESA.SUS.20.1000	Ø20	1000	0.8	400g	0248565(	BU)	End cup.20BU
0240759	ESA.SUS.20.1500		1500		600g	0243820(	BL)	End cup.20BL

Aluminium Tube



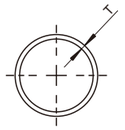

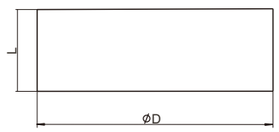



PN	Model	A [mm]	B [mm]	T [mm]	Weight	End cup PN		End cup Model
0243590	ESA.ALT.20.1000	Ø20	1000	2.0	308g	0242689(	GY)	End cup.20GY
0249460	ESA.ALT.20.2000		2000	2.0	616g	0248565(	BU)	End cup.20BU
						0243820(	BL)	End cup.20BL
0242848	ESA.ALT.25.1000	Ø25	1000	2.5	467g	0247113(	BL)	End cup.25BL
0241565	ESA.ALT.25.2000		2000	2.5	934g			
0243145	ESA.ALT.30.1000	Ø30	1000	2.5	558g	0249471(	BL)	End cup.30BL
0242087	ESA.ALT.30.2000		2000	2.5	1116g			
0243593	ESA.ALT.40.1000	Ø40	1000	2.5	799g	0241282(	BL)	End cup.40BL
0245953	ESA.ALT.40.2000		2000	2.5	1558g			

Carbon fiber Tube



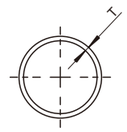

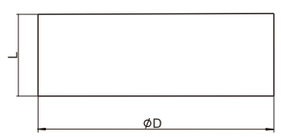



PN	Model	A [mm]	B [mm]	T [mm]	Weight	End cup PN		End cup Model
0242610	ESA.CFT.08.1000	Ø8	1000	0.8	31g	0242057(	Red)	End cup.08RD
0248304	ESA.CFT.08.2000		2000	0.8	62g			
0243605	ESA.CFT.12.1000	Ø12	1000	1.0	59g	0246695(	GY)	End cup.12GY
0242424	ESA.CFT.12.2000		2000	1.0	118g	0241509(	BU)	End cup.12BU
						0249482(	BL)	End cup.12BL
0246179	ESA.CFT.20.1000	Ø20	1000	1.2	103g	0242689(	GY)	End cup.20GY
0241153	ESA.CFT.20.2000		2000	1.2	206g	0248565(	BU)	End cup.20BU
						0243820(	BL)	End cup.20BL
0246888	ESA.CFT.25.1000	Ø25	1000	1.5	169g	0247113(	BL)	End cup.25BL
0249588	ESA.CFT.25.2000		2000	1.5	339g			
0246144	ESA.CFT.30.1000	Ø30	1000	1.5	236g	0249471(	BL)	End cup.30BL
0249385	ESA.CFT.30.2000		2000	1.5	472g			
0240309	ESA.CFT.40.1000	Ø40	1000	2.5	431g	0241282(	BL)	End cup.40BL
0247473	ESA.CFT.40.2000		2000	2.5	861g			

Extruded prifiles

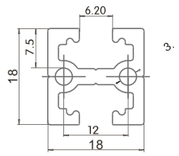

ESA.FEP.1818

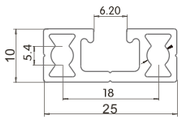

ESA.FEP.2510

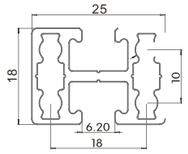

ESA.FEP.2518

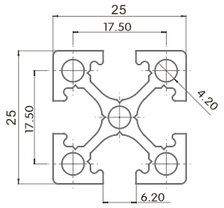

ESA.FEP.2525

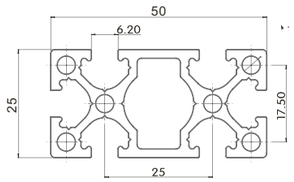

ESA.FEP.5025

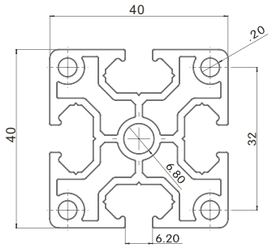

ESA.FEP.4040

PN	Model	Length [mm]	Weight	End cup PN	End cup Model
0240547	ESA.FEP.1818.1000	1000mm	425g	0241749	End cup.1818
0244499	ESA.FEP.2510.1000	1000mm	310g	0246215	End cup.2510
0242500	ESA.FEP.2518.1000	1000mm	400g	0242008	End cup.2518
0244131	ESA.FEP.2525.1000	1000mm	610g	0246438	End cup.2525
0245043	ESA.FEP.2525.2000	2000mm	1220g		
0243855	ESA.FEP.5025.1000	1000mm	1040g	0249597	End cup.5025
0247153	ESA.FEP.5025.2000	2000mm	2080g		
0244934	ESA.FEP.4040.1000	1000mm	1300g	0245145	End cup.4040
0247939	ESA.FEP.4040.2000	2000mm	2600g		

T T-Nuts



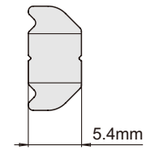

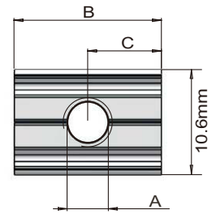

PN	Model	A [mm]	B [mm]	C [mm]	Weight
0240297	ESA.STN.M4	M4	15	7.5	5g
0248829	ESA.STN.M5	M5	15	7.5	5g
0243147	ESA.STN.M6	M6	15	7.5	5g



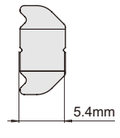

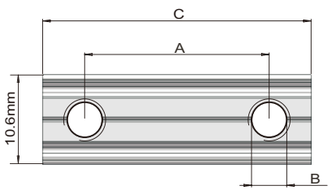

PN	Model	A [mm]	B [mm]	C [mm]	Weight
0244819	ESA.STN.D08.M4	8	M4	16	5g
0242802	ESA.STN.D10.M5	10	M5	20	7g
0249236	ESA.STN.D15.M5	15	M5	25	9g
0240661	ESA.STN.D17.M5	17	M5	25	9g
0248581	ESA.STN.D22.M5	22	M5	32	11g
0245112	ESA.STN.D25.M5	25	M5	35	13g
0244016	ESA.STN.D28.M5	28	M5	38	14g
0243687	ESA.STN.D30.M5	30	M5	40	15g
0249903	ESA.STN.D35.M5	35	M5	45	16g
0242436	ESA.STN.D40.M5	40	M5	50	18g
0240669	ESA.STN.D50.M5	50	M5	60	22g
0240351	ESA.STN.D60.M5	60	M5	70	26g
0242542	ESA.STN.D90.M5	90	M5	100	38g

Last-Minute Nut



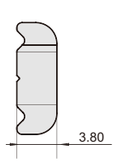

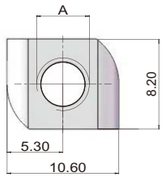

PN	Model	A [mm]	Weight
0249096	ESA.STN.M4R	M4	2g
0249132	ESA.STN.M5R	M5	2g
0242348	ESA.STN.M6R	M6	2g

Application example

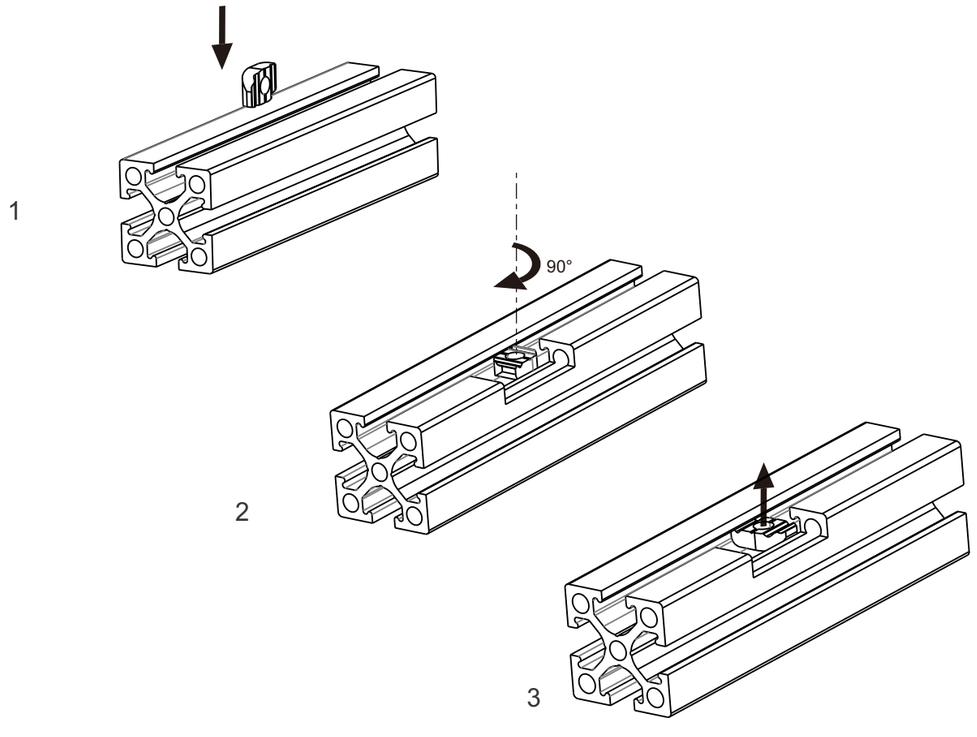

Screws



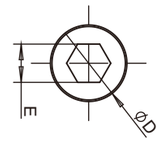

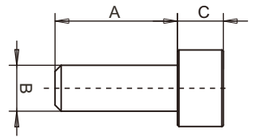

PN	Model	A [mm]	B [mm]	C [mm]	D [mm]	E [mm]	Weight
0249246	ESA.STC.M4.L10	10	M4	4	6.8	3.2	1.6g
0241128	ESA.STC.M4.L12	12					1.8g
0243192	ESA.STC.M4.L14	14					1.9g
0240741	ESA.STC.M4.L16	16					2.0g
0246429	ESA.STC.M4.L18	18					2.1g
0247130	ESA.STC.M4.L20	20					2.2g
0246643	ESA.STC.M4.L22	22					2.5g
0248514	ESA.STC.M4.L25	25					2.7g
0241047	ESA.STC.M5.L10	10	M5	5	8.3	4.1	2.9g
0240855	ESA.STC.M5.L12	12					3.1g
0243439	ESA.STC.M5.L14	14					3.3g
0246450	ESA.STC.M5.L16	16					3.6g
0244771	ESA.STC.M5.L18	18					3.8g
0249616	ESA.STC.M5.L20	20					4.0g
0240029	ESA.STC.M5.L22	22					4.3g
0240820	ESA.STC.M5.L25	25					4.7g
0241730	ESA.STC.M5.L30	30					5.3g
0241028	ESA.STC.M5.L35	35					5.9g
0241430	ESA.STC.M5.L40	40					6.5g
0242206	ESA.STC.M5.L50	50					7.6g
0243310	ESA.STC.M5.L60	60					10.0g
0241584	ESA.STC.M6.L10	10	M6	6	10	5.3	4.0g
0246378	ESA.STC.M6.L12	12					4.6g
0240022	ESA.STC.M6.L14	14					5.2g
0244385	ESA.STC.M6.L16	16					5.5g
0247287	ESA.STC.M6.L18	18					5.7g
0244985	ESA.STC.M6.L20	20					6.1g
0249556	ESA.STC.M6.L25	25					6.9g
0242221	ESA.STC.M6.L30	30					7.7g
0246963	ESA.STC.M6.L35	35					8.6g

Single Hole Shim



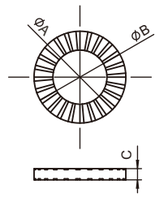

PN	Model	A [mm]	B [mm]	C [mm]	Weight
0248897	ESA.STS.M4	4.5	7	0.45	0.07g
0241494	ESA.STS.M5	5.5	9	0.55	0.17g
0247884	ESA.STS.M6	6.5	10	0.65	0.20g

Double Holes Shim



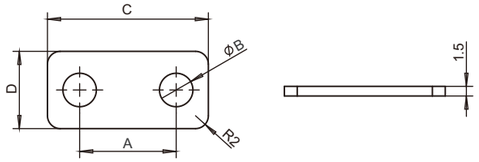

PN	Model	A [mm]	B [mm]	C [mm]	D [mm]	Weight
0248043	ESA.STD.D08.M4	8	4.5	16	12	1.8g
0243950	ESA.STD.D10.M5	10	5.5	20	12	2.2g
0243954	ESA.STD.D15.M5	15	5.5	25	12	2.5g
0240144	ESA.STD.D17.M5	17	5.5	25	12	3.0g
0244842	ESA.STD.D22.M5	22	5.5	32	12	3.3g
0245325	ESA.STD.D25.M5	25	5.5	35	12	3.5g

Straight fixing plate

(kit with screws)

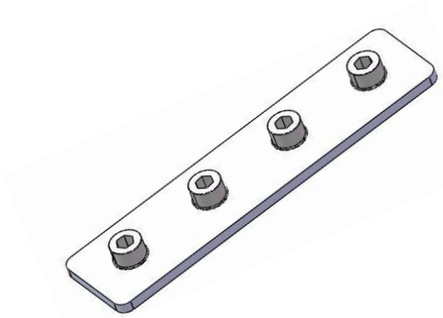

	Model	ESA.BSP.2550.25	ESA.BSP.25100.25	ESA.BSP.40160.40
	PN	0244836	0246925	0249343
A	[mm]	25	25	40
B	[mm]	50	100	160
C	[mm]	25	25	40
D	[mm]	-	25	40
E	[mm]	-	25	40
Compatible with:		2510	2510	-
		2518	2518	-
		2525	2525	-
		5025	5025	-
		-	-	4040
		-	-	8040
		screws Accessorier		
	(Screws)	ESA.STC.M5.L12	ESA.STC.M5.L12	ESA.STC.M5.L12
	(Single hole shim)	ESA.STS.M5	ESA.STS.M5	ESA.STS.M5
T	(T-Nuts)	ESA.STN.M5	ESA.STN.D25.M5	ESA.STN.D40.M5
Weight		45 g	95 g	195 g

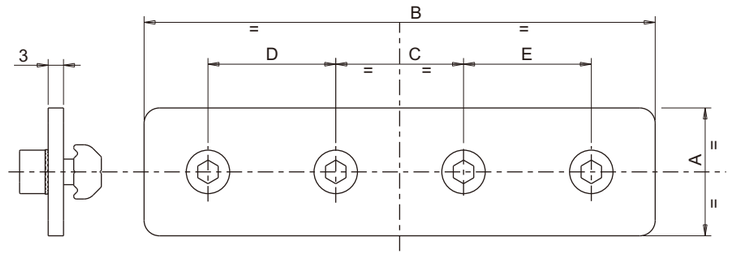

Application example

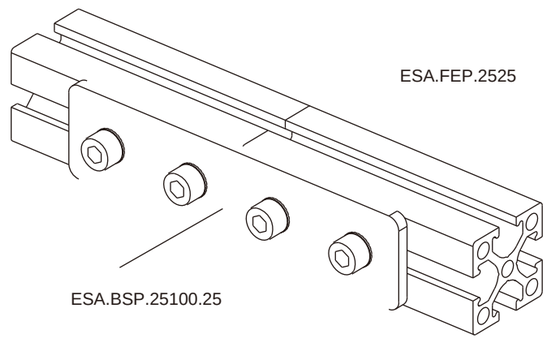

L L-shaped fixing plate

(kit with screws)



	Model	ESA.BLP.2550.25	ESA.BLP.2575.25	ESA.BLP.40120.40
	PN	0247914	0249101	0243431
A	[mm]	25	25	40
B	[mm]	50	75	120
C	[mm]	25	25	40
D	[mm]	-	25	40
E	[mm]	25	25	40
F	[mm]	12.5	12.5	20
G	[mm]	50	50	80
Compatible with:		2510	2510	-
		2518	2518	-
		2525	2525	-
		5025	5025	-
		-	-	4040
		-	-	8040
		screws Accessorier		
	(Screws)	ESA.STC.M5.L123	ESA.STC.M5.L124	ESA.STC.M5.L124
	(Single hole shim)	ESA.STS.M53	ESA.STS.M54	ESA.STS.M54
T	(T-Nuts)	ESA.STN.M51 ESA.STN.D25.M51	ESA.STN.D25.M52	ESA.STN.D40.M52
Weight		70 g	104 g	200 g

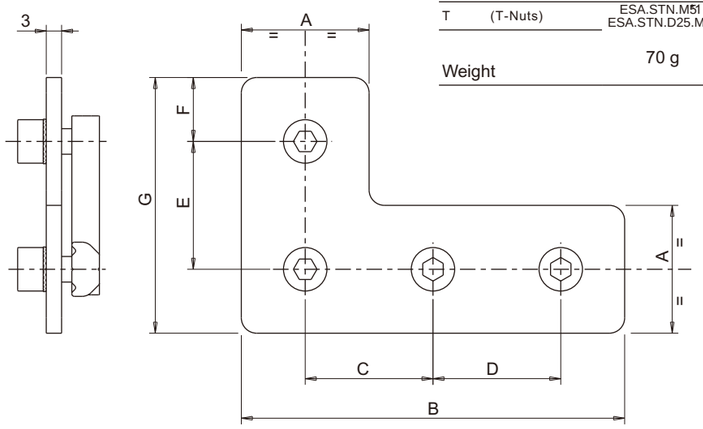

Application example

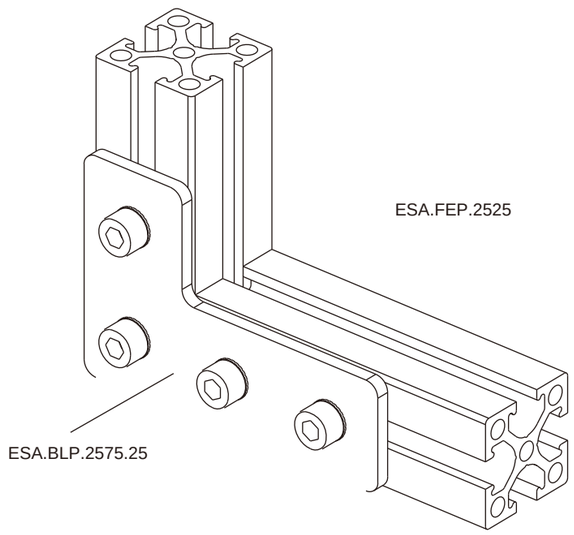

T- T-shaped fixing plate

(kit with screws)



	Model	ESA.BTP.2550.25	ESA.BTP.25100.25	ESA.BTP.40120.40
	PN	0242924	0242868	0242144
A	[mm]	25	25	40
B	[mm]	50	100	120
C	[mm]	25	25	90
D	[mm]	-	25	-
E	[mm]	-	25	-
F	[mm]	25	25	40
G	[mm]	12.5	12.5	15
H	[mm]	75	75	110
Compatible with:		2510	2510	-
		2518	2518	-
		2525	2525	-
		5025	5025	-
		-	-	4040
		-	-	8040
		screws Accessorier		
	(Screws)	ESA.STC.M5.L124	ESA.STC.M5.L126	ESA.STC.M5.L124
	(Single hole shim)	ESA.STS.M54	ESA.STS.M56	ESA.STS.M54
T	(T-Nuts)	ESA.STN.D25.M52	ESA.STN.D25.M53	ESA.STN.D40.M51 ESA.STN.D90.M51
Weight		95 g	145 g	250 g

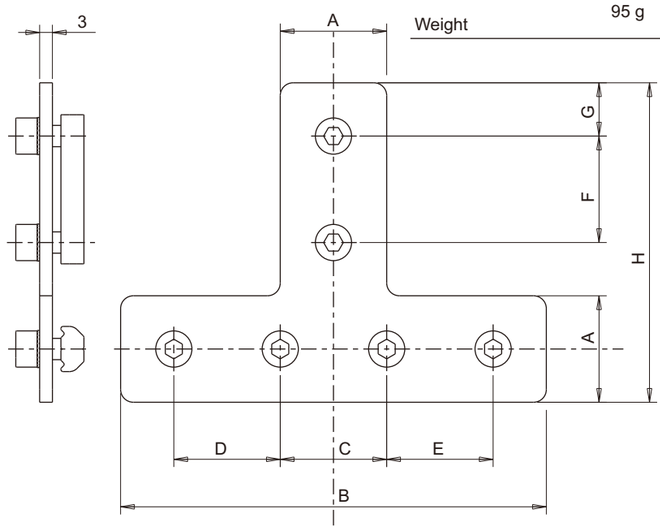

Application example

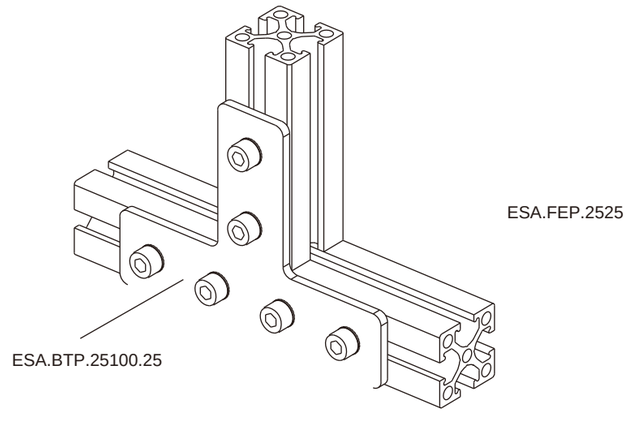

Quick changer
Eoat components
Gripp components
Vacuum components
Fitting
AIR NIPPERS
STATIC SOLUTIONS

45° fixing plate

(kit with screws)

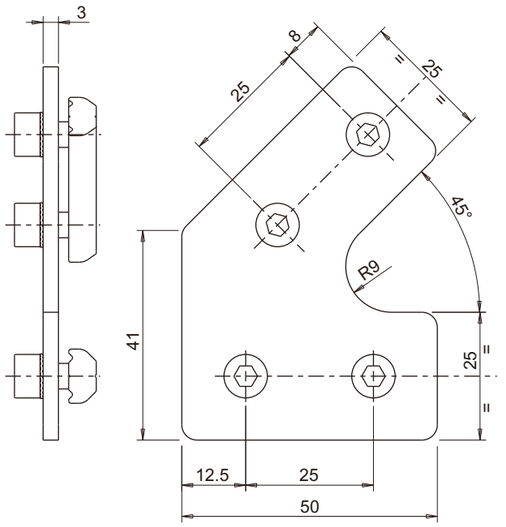

	Model	ESA.BTP.2545.25
	PN	0243865
	screws Accessorier	
	(Screws)	ESA.STC.M5.L12
	(Single hole shim)	ESA.STS.M5
T	(T-Nuts)	ESA.STN.D25.M5
Weight		100 g



Application example

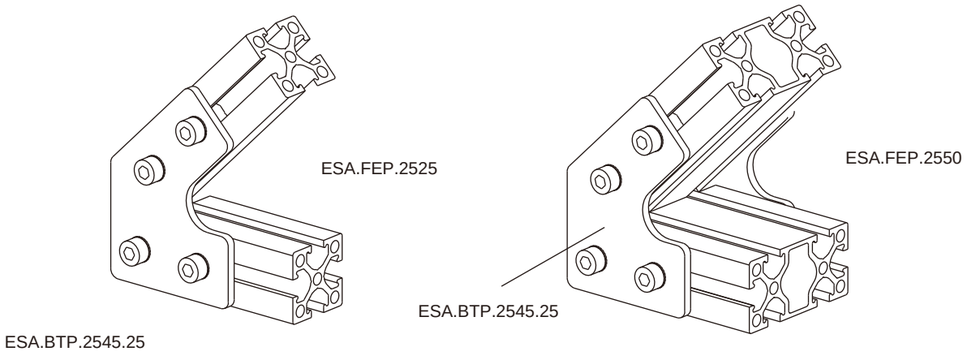

Fixing plate with adjustable angle

(kit with screws)

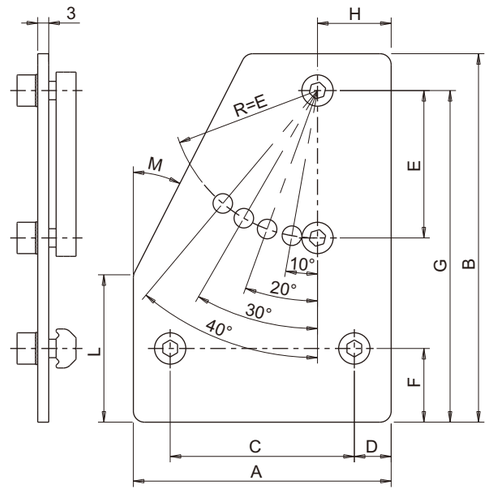

	Model	ESA.BAP.2560.40	ESA.BAP.2590.60	ESA.BAP.4070.50
	PN	0249426	0242445	0248660
A	[mm]	60	90	70
B	[mm]	85	95	100
C	[mm]	40	60	50
D	[mm]	10	15	10
E	[mm]	40	50	40
F	[mm]	12.5	12.5	20
G	[mm]	76	86	90
H	[mm]	12.5	12.5	20
L	[mm]	25	25	40
M	[mm]	30°	30°	27°
Compatible with:		2510	2510	-
		2518	2518	-
		2525	2525	-
		5025	5025	-
		-	-	4040
		-	-	8040
	screws Accessorier			
	(Screws)	ESA.STC.M5.L12	ESA.STC.M5.L12	ESA.STC.M5.L12
	(Single hole shim)	ESA.STS.M5	ESA.STS.M5	ESA.STS.M5
T	(T-Nuts)	ESA.STN.D40.M5	ESA.STN.D50.M5 ESA.STN.D60.M5	ESA.STN.D40.M5 ESA.STN.D50.M5
Weight		130 g	215 g	175 g



Application example

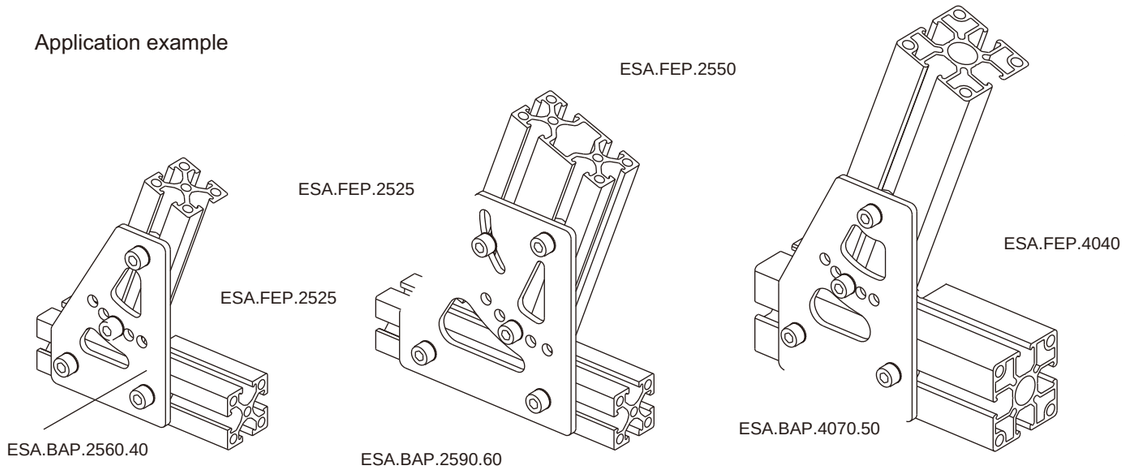

Fixing plate with adjustable angle

(kit with screws)

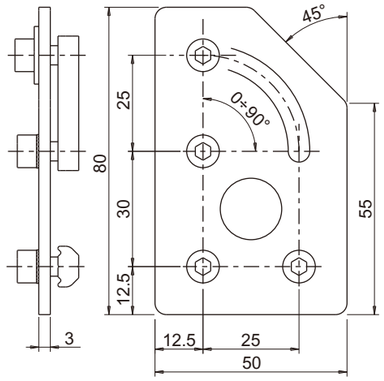

	Model	ESA.BAP.2550.25
	PN	0241078
	screws Accessorier	
	(Screws)	ESA.STC.M5.L12 4
	(Single hole shim)	ESA.STS.M5 4
T	(T-Nuts)	ESA.STN.D25.M5 2
	Weight	115 g



Application example

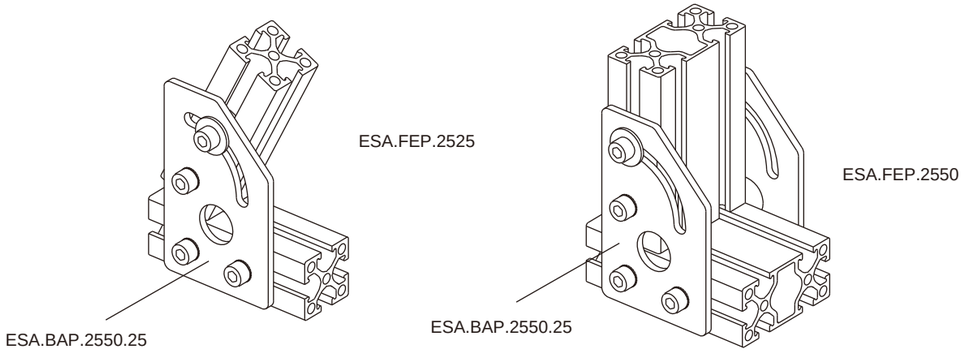

Cross mounting bracket for profiles

(kit with screws)

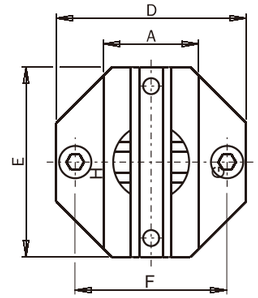



		Model	ESA.BCM.1818.28	ESA.BCM.2518.35	ESA.BCM.2525.35	ESA.BCM.5050.60	ESA.BCM.2550.60	ESA.BCM.4040.50	ESA.BCM.8080.90	ESA.BCM.4080.90	ESA.BCM.2580.90	ESA.BCM.2540.50
		PN	0240007	0246545	0241333	0240639	0241083	0246543	0244164	0246174	0244900	0246324
A	[mm]		18	18	25	50	25	40	80	40	25	25
B	[mm]		18	25	25	50	50	40	80	80	80	40
C	[mm]		2	4	4	4	4	4	4	4	4	4
D	[mm]		38	38	45	70	45	60	100	60	45	45
E	[mm]		38	45	45	70	70	60	100	100	100	60
F	[mm]		28	35	35	60	35	50	90	50	35	35
G	[mm]		28	35	35	60	60	50	90	90	90	50
H	[mm]		M5	M5	M5	M5	M5	M5	M5	M5	M5	M5
FEP-1018			☑	☑	☐	☐	☐	☐	☐	☐	☐	☐
FEP-1818			☑	☑	☐	☐	☐	☐	☐	☐	☐	☐
FEP-2510			☐	☑	☑	☐	☑	☐	☐	☐	☑	☑
FEP-2518			☐	☑	☑	☐	☑	☐	☐	☐	☑	☑
FEP-2525			☐	☑	☑	☐	☑	☐	☐	☐	☑	☑
FEP-5025			☐	☑	☑	☑	☑	☐	☐	☐	☑	☑
FEP-4040			☐	☐	☐	☐	☐	☑	☐	☑	☐	☑
FEP-8040			☐	☐	☐	☐	☐	☑	☑	☑	☑	☑
		screws Accessorier										
	(Screws)		ESA.STC.M5.L12 4	ESA.STC.M5.L14 4	ESA.STC.M5.L14 4	ESA.STC.M5.L18 8	ESA.STC.M5.L16 6	ESA.STC.M5.L16 4	ESA.STC.M5.L16 8	ESA.STC.M5.L16 6	ESA.STC.M5.L16 4 ESA.STC.M5.L14 2	ESA.STC.M5.L14 2 ESA.STC.M5.L14 2
	(Single hole shi		ESA.STS.M5 4	ESA.STS.M5 4	ESA.STS.M5 4	ESA.STS.M5 8	ESA.STS.M5 6	ESA.STS.M5 4	ESA.STS.M5 8	ESA.STS.M5 6	ESA.STS.M5 6	ESA.STS.M5 4
T	(T-Nuts)		ESA.STN.D28.M5 2	ESA.STN.D28.M5 1 ESA.STN.D35.M5 1	ESA.STN.D40.M5 2	ESA.STN.D60.M5 4	ESA.STN.D60.M5 3	ESA.STN.D50.M5 2	ESA.STN.D90.M5 4	ESA.STN.D50.M5 2 ESA.STN.D90.M5 1	ESA.STN.D35.M5 2 ESA.STN.D90.M5 1	ESA.STN.D35.M5 1 ESA.STN.D50.M5 1
	Weight		40 g	60 g	75 g	170 g	155 g	85 g	255 g	175 g	140 g	75 g

Application example

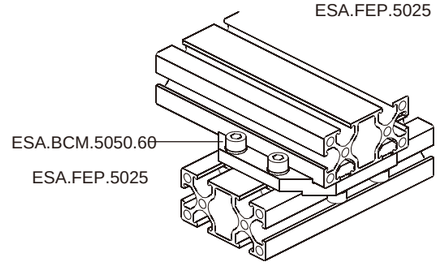

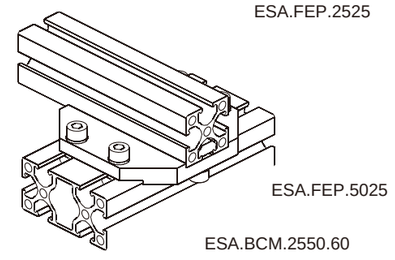

Cross (square) joint connector

(kit with screws)



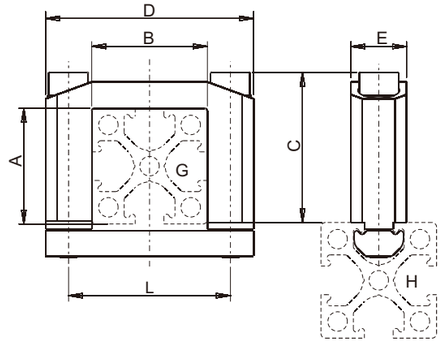

	Model	ESA.BSM.1818.28	ESA.BSM.1825.35	ESA.BSM.2525.35	ESA.BSM.5025.35	ESA.BSM.2550.60
	PN	0247018	0241881	0249338	0245206	0249762
A	[mm]	18	18	25	50	25
B	[mm]	18	25	25	25	50
C	[mm]	29	32	32	57	32
D	[mm]	38	45	45	45	70
E	[mm]	12	12	12	12	12
G		ESA.FEP.1818	ESA.FEP.2518	ESA.FEP.2525	ESA.FEP.5025	ESA.FEP.5025
H		ESA.FEP.1818	-	-	-	-
		ESA.FEP.2518	ESA.FEP.2518	ESA.FEP.2518	ESA.FEP.2518	ESA.FEP.2518
		ESA.FEP.2510	ESA.FEP.2510	ESA.FEP.2510	ESA.FEP.2510	ESA.FEP.2510
		ESA.FEP.2525	ESA.FEP.2525	ESA.FEP.2525	ESA.FEP.2525	ESA.FEP.2525
		ESA.FEP.5025	ESA.FEP.5025	ESA.FEP.5025	ESA.FEP.5025	ESA.FEP.5025
		ESA.FEP.4040	ESA.FEP.4040	ESA.FEP.4040	ESA.FEP.4040	ESA.FEP.4040
L	[mm]	28	35	35	35	60
		screws Accessorier				
	(Screws)	ESA.STC.M5.L302	ESA.STC.M5.L302	ESA.STC.M5.L352	ESA.STC.M5.L602	ESA.STC.M5.L352
	(Single hole shim)	ESA.STS.M52	ESA.STS.M52	ESA.STS.M52	ESA.STS.M52	ESA.STS.M52
T	(T-Nuts)	ESA.STN.D28.M51	ESA.STN.D35.M51	ESA.STN.D35.M51	ESA.STN.D35.M51	ESA.STN.D60.M51
Weight		41 g	41 g	45 g	65 g	50 g

Application example

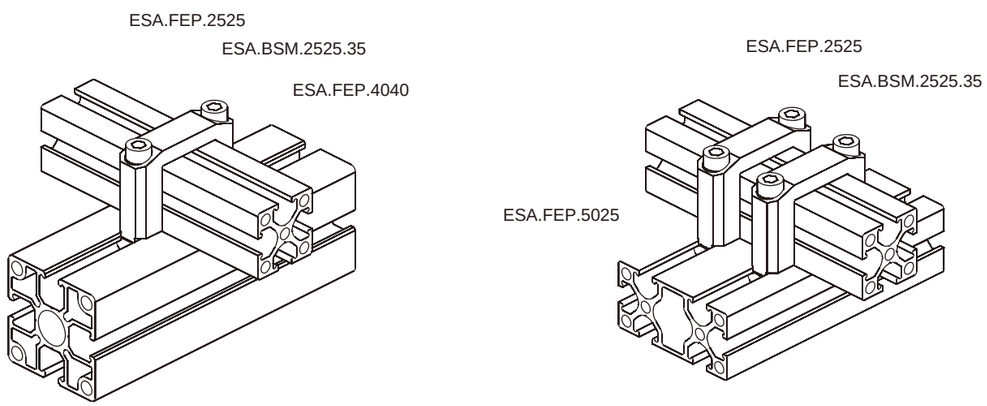

Cross (round) joint connector

(kit with screws)



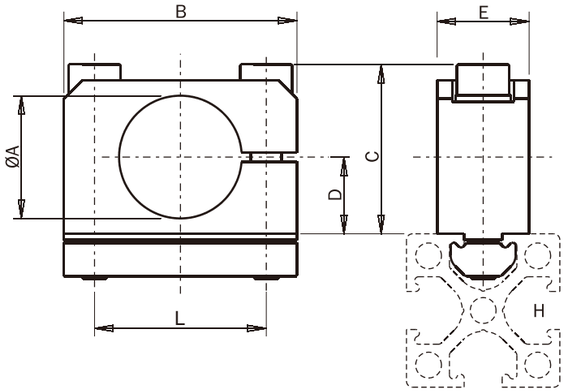

	Model	ESA.BRM.1025.17	ESA.BRM.1432.22	ESA.BRM.2038.28	ESA.BRM.3050.40	ESA.BRM.5070.60
	PN	0248996	0244462	0242933	0249785	0241810
A	[mm]	Ø10	Ø14	Ø20	Ø30	Ø50
B	[mm]	25	32	38	50	70
C	[mm]	18.5	23	28	34	56
D	[mm]	7	9	12.5	17	28
E	[mm]	10	12	15	20	25
H		ESA.FEP.1818	-	-	-	-
		ESA.FEP.2518	ESA.FEP.2518	-	-	-
		ESA.FEP.2510	ESA.FEP.2510	-	-	-
		ESA.FEP.2525	ESA.FEP.2525	ESA.FEP.2525	ESA.FEP.2525	ESA.FEP.2525
		ESA.FEP.5025	ESA.FEP.5025	ESA.FEP.5025	ESA.FEP.5025	ESA.FEP.5025
		ESA.FEP.4040	ESA.FEP.4040	ESA.FEP.4040	ESA.FEP.4040	ESA.FEP.4040
L	[mm]	17	22	28	40	60
		screws Accessorier				
	(Screws)	ESA.STC.M5.L252	ESA.STC.M5.L252	ESA.STC.M5.L302	ESA.STC.M5.L352	ESA.STC.M5.L502
	(Single hole shim)	ESA.STS.M52	ESA.STS.M52	ESA.STS.M52	ESA.STS.M52	ESA.STS.M52
T	(T-Nuts)	ESA.STN.D17.M51	ESA.STN.D22.M51	ESA.STN.D28.M51	ESA.STN.D40.M51	ESA.STN.D60.M51
Weight		15 g	32 g	45 g	75 g	150 g

Application example

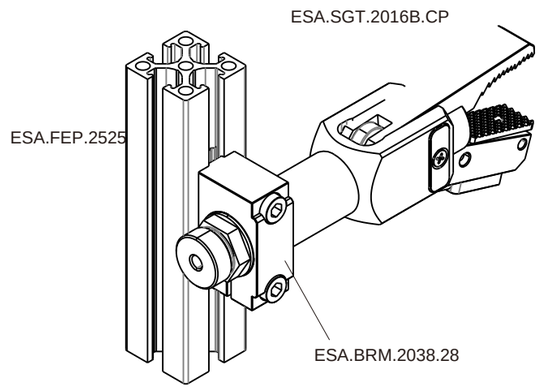

Vertical fastening of the profiles

(kit with screws)

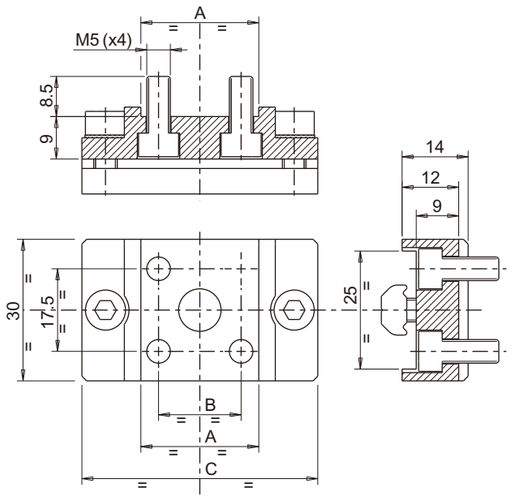

	Model	ESA.BVM.2525.25	ESA.BVM.2550.25
	PN	0249868	0247664
A	[mm]	25	50
B	[mm]	17.5	42.5
C	[mm]	50	70
Compatible with:		ESA.FEP.2525ESA.FEP.2525	
		ESA.FEP.5025ESA.FEP.5025	
		screws Accessorier	
	(Screws)	ESA.STC.M5.L126	ESA.STC.M5.L124
	(Single hole shim)	ESA.STS.M52	ESA.STS.M52
T	(T-Nuts)	ESA.STN.D40.M51	ESA.STN.D60.M51
Weight		65 g	85 g



Application example

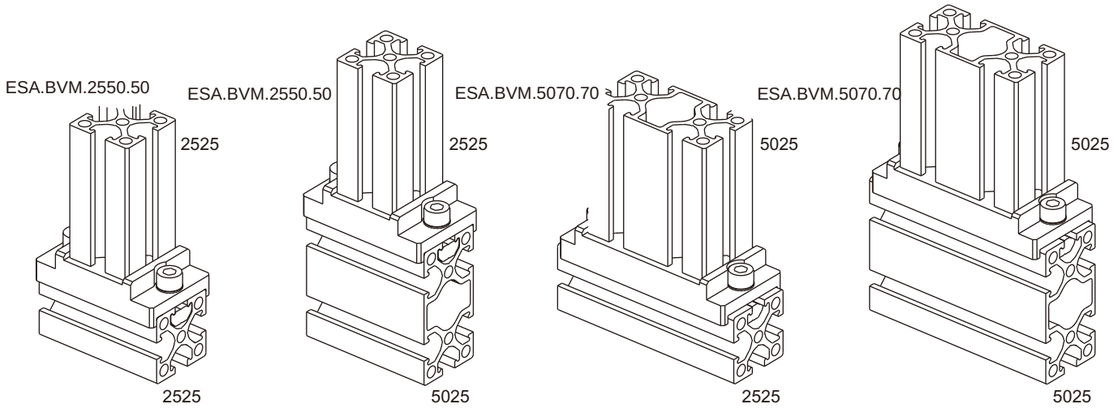

Vertical fastening of the profiles

(kit with screws)

	Model	ESA.BVM.5025.50
	PN	0245245
Compatible with:		ESA.FEP.2525ESA.FEP.2525
		ESA.FEP.5025ESA.FEP.5025
		screws Accessorier
	(Screws)	ESA.STC.M5.L128
	(Single hole shim)	ESA.STS.M58
T	(T-Nuts)	ESA.STN.D35.M52
Weight		110 g

	Model	ESA.BVM.5025.75
	PN	0248978
Compatible with:		ESA.FEP.2525ESA.FEP.2525
		ESA.FEP.5025ESA.FEP.5025
		screws Accessorier
	(Screws)	ESA.STC.M5.L128
	(Single hole shim)	ESA.STS.M58
T	(T-Nuts)	ESA.STN.D50.M52
Weight		140 g

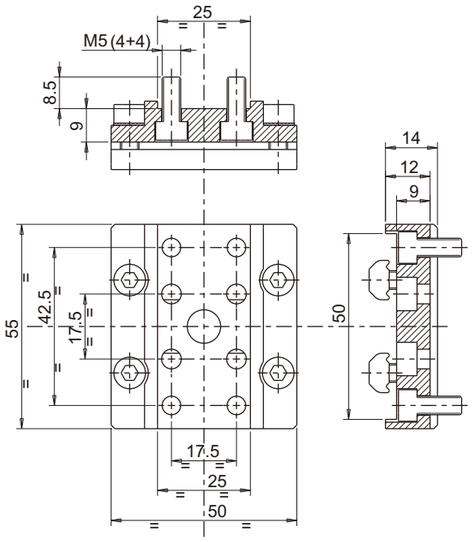

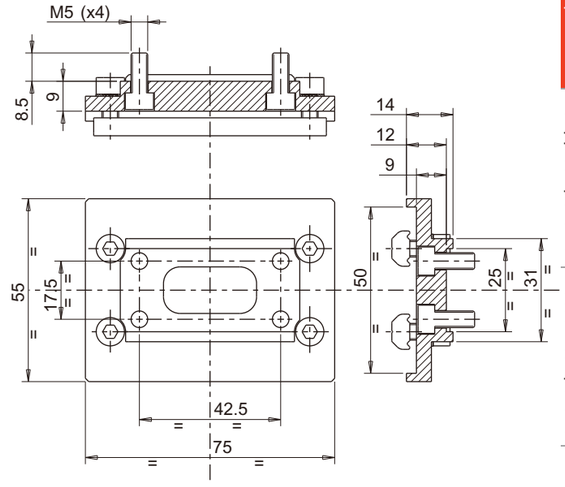

Application example

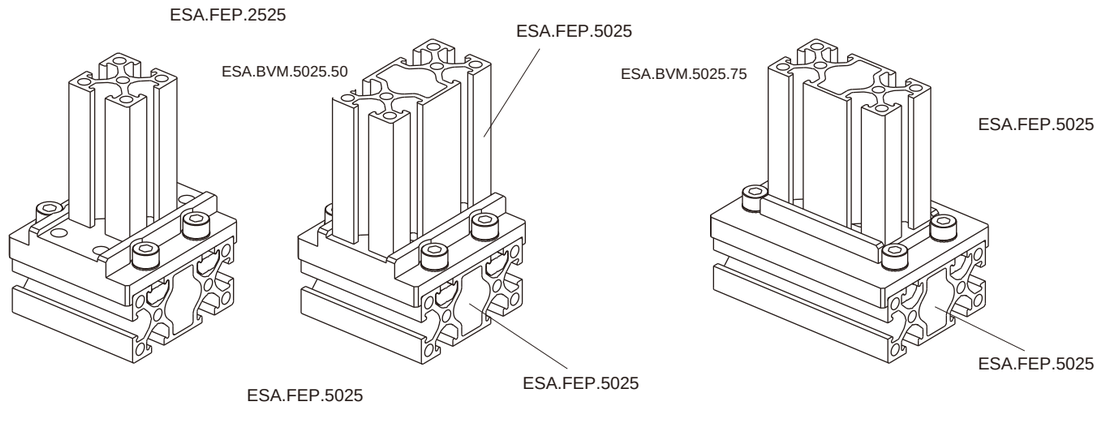

Interface for square profile/Quick Changer

(kit with screws)

	Model	ESA.IPQ.5025.72
	PN	0240224
Compatible with:		ESA.FEP.5025
	screws Accessorier	
	(Screws)	ESA.STC.M5.L14 12 ESA.STC.M5.L75 56
	(Single hole shim)	ESA.STS.M5 18
T	(T-Nuts)	ESA.STN.D60.M5 56
Weight		680 g

	Model	ESA.IPQ.8040.88
	PN	0243523
Compatible with:		ESA.FEP.8040
	screws Accessorier	
	(Screws)	ESA.STC.M5.L14 12 ESA.STC.M6.L20 4 ESA.STC.M6.L85 4
	(Single hole shim)	ESA.STS.M5 12 ESA.STS.M6 8
T	(T-Nuts)	ESA.STN.D60.M5 56
Weight		1300 g

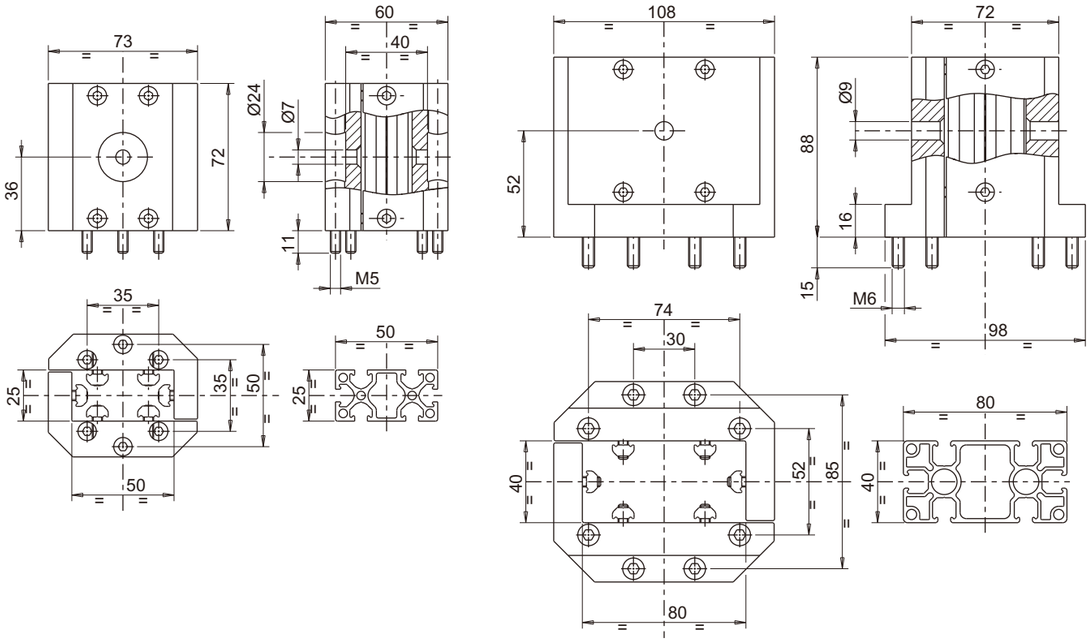

Application example

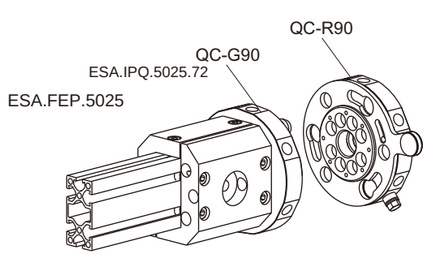

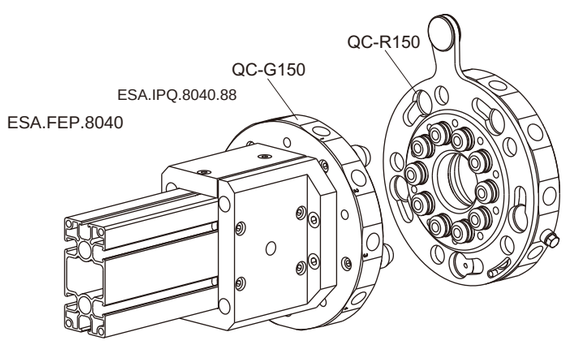

Flat straight connector

(kit with screws)

	Model	ESA.FSC.2525.104	ESA.FSC.2525.148	ESA.FSC.2525.158	ESA.FSC.5025.104	ESA.FSC.5025.148	ESA.FSC.5025.158
	PN	0249387	0243887	0245986	0247266	0247576	0243571
A	[mm]	76	120	130	76	120	130
B	[mm]	25	25	25	25	25	25
C	[mm]	25	25	25	50	50	50
D	[mm]	28	28	28	53	53	53
E	[mm]	104	148	158	104	148	158
F	[mm]	2	2	2	2	2	2
G	[mm]	8	8	8	8	8	8
Compatible with:		ESA.FEP.2525	ESA.FEP.2525	ESA.FEP.2525	ESA.FEP.5025	ESA.FEP.5025	ESA.FEP.5025
Weight		50 g	60 g	65 g	75 g	100 g	110 g

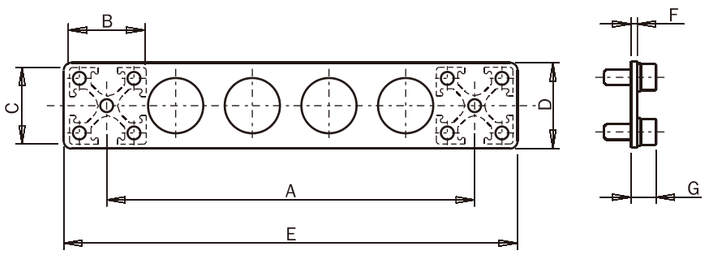

Application example

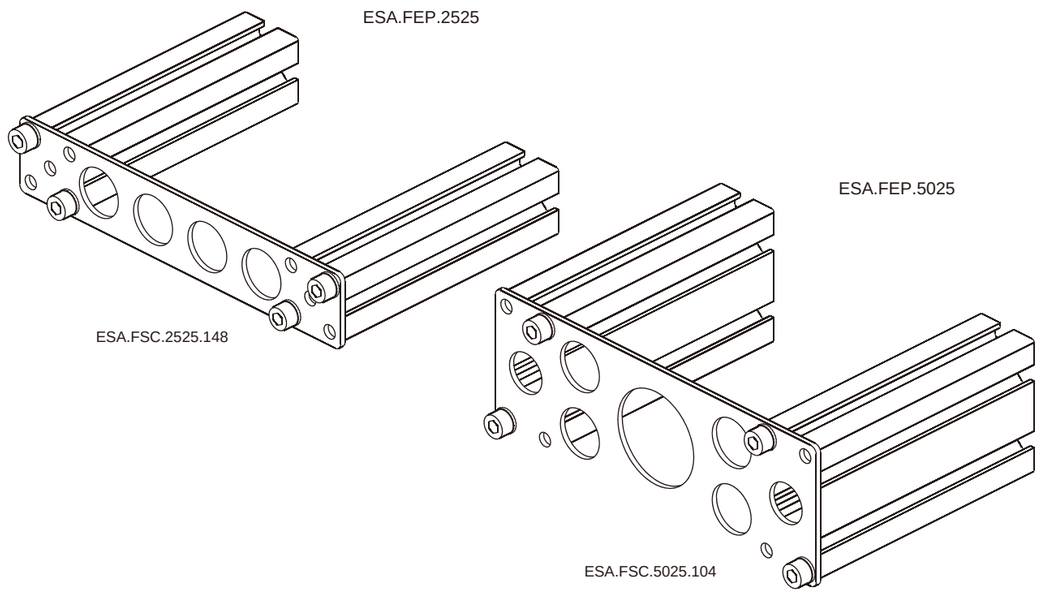

Angle bracket for profiles

(kit with screws)

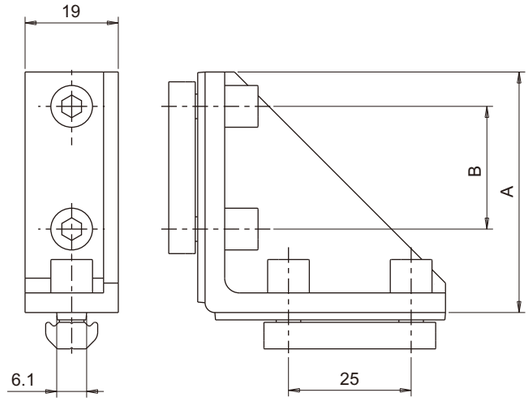

	Model	ESA.ABP.2519.M5	ESA.ABP.5019.M5
	PN	0246683	0248428
A	[mm]	24.5	49
B	[mm]	-	25
		screws Accessorier	
	(Screws)	ESA.STC.M5.L122	ESA.STC.M5.L124
	(Single hole shim)	ESA.STS.M52	ESA.STS.M54
T	(T-Nuts)	ESA.STN.M52	ESA.STN.D25.M52
Weight		33g	82 g



Application example

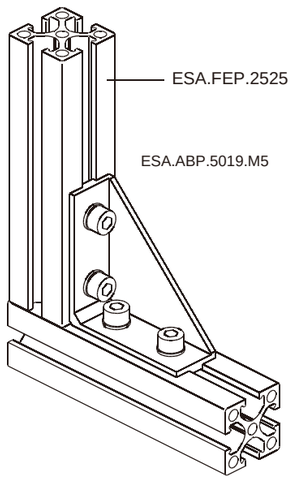

Mounting bracket

(kit with screws)

	Model	ESA.BME.1018.08	ESA.BME.1025.08	ESA.BME.1218.08	ESA.BME.1225.08	ESA.BME.1425.10	ESA.BME.2025.15	ESA.BME.2040.15
	PN	0246826	0240110	0246699	0241986	0244045	0242488	0249958
A	[mm]	Ø10	Ø10	Ø12	Ø20	Ø14	Ø20	Ø20
B	[mm]	16	16	16	16	20	25	25
C	[mm]	43	49	43	50	52.1	57.1	74.1
D	[mm]	20	20	20	20	25	30	30
E	[mm]	38	44	38	44	46	51.5	68
F	[mm]	10	14	10	14	14	14	22
G	[mm]	4.5	4.5	4.5	4.5	6	6.2	6
H	[mm]	18	25	18	25	25	25	40
L	[mm]	8	8	8	8	12	12	12
M	[mm]	8	8	8	8	10	15	15
Compatible with:		ESA.FEP.1818	ESA.FEP.2510 ESA.FEP.2518 ESA.FEP.2525 ESA.FEP.5025	ESA.FEP.1818	ESA.FEP.2510 ESA.FEP.2518 ESA.FEP.2525 ESA.FEP.5025	ESA.FEP.2510 ESA.FEP.2518 ESA.FEP.2525 ESA.FEP.5025	ESA.FEP.2510 ESA.FEP.2518 ESA.FEP.2525 ESA.FEP.5025	ESA.FEP.4040 ESA.FEP.8040
					screws Accessorier			
(Screws)		ESA.STC.M4.L142 **ESA.STC.M4.L121**	ESA.STC.M4.L142 ESA.STC.M4.L121	ESA.STC.M4.L143	ESA.STC.M4.L143	ESA.STC.M5.L162	ESA.STC.M5.L162 ESA.STC.M5.L141	ESA.STC.M5.L162 ESA.STC.M5.L141
(Single hole shim)		ESA.STS.M43	ESA.STS.M43	ESA.STS.M43	ESA.STS.M43	ESA.STS.M52	ESA.STS.M53	ESA.STS.M53
(Double holes sh		ESA.STD.D08.M41	ESA.STD.D08.M41	ESA.STD.D08.M41	ESA.STD.D08.M41	ESA.STD.D10.M51	ESA.STD.D15.M51	ESA.STD.D15.M51
T (T-Nuts)		ESA.STN.D08.M41	ESA.STN.D08.M41	ESA.STN.D08.M41	ESA.STN.D08.M41	ESA.STN.D10.M51	ESA.STN.D15.M51	ESA.STN.D15.M51
Weight		20 g	21 g	18 g	19 g	34 g	45 g	48 g

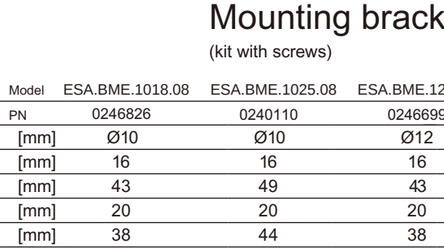

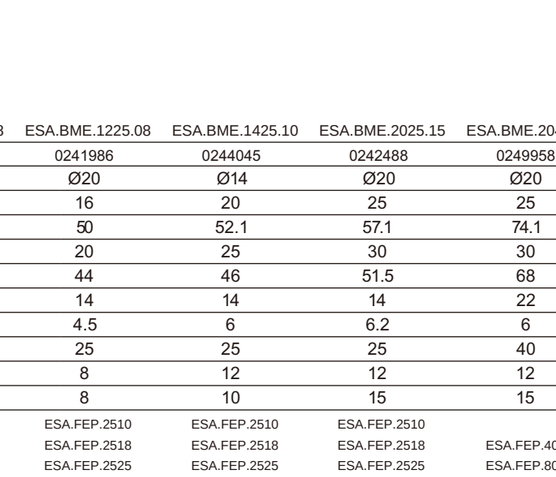

Application example

ESA.BME.1425.10 ESA.FEP.2525

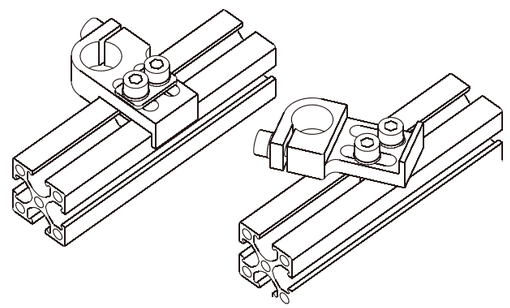

Mounting bracket

(kit with screws)

	Model	ESA.BA1.0840.08	ESA.BA1.1040.08	ESA.BA1.1240.08	ESA.BA1.1440.10	ESA.BA1.1450.10	ESA.BA1.2060.15	ESA.BA1.3060.22
	PN	0243531	0241738	0249715	0240939	0240558	0249498	0243661
A	[mm]	Ø8	Ø10	Ø12	Ø14	Ø14	Ø20	Ø30
B	[mm]	16	16	16	20	20	25	35
C	[mm]	75	75	75	81.1	91.1	111.1	121.1
D	[mm]	20	20	20	25	25	30	42
E	[mm]	70	70	70	75	85	105	115
F	[mm]	40	40	40	40	50	60	60
G	[mm]	4.5	4.5	4.5	6	6	6	8
L	[mm]	8	8	8	12	12	12	12
M	[mm]	8	8	8	10	10	15	22
	AL Profile	ESA.FEP.1818 ESA.FEP.2510 ESA.FEP.2518 ESA.FEP.2525 ESA.FEP.5025	ESA.FEP.1818 ESA.FEP.2510 ESA.FEP.2518 ESA.FEP.2525 ESA.FEP.5025	ESA.FEP.1818 ESA.FEP.2510 ESA.FEP.2518 ESA.FEP.2525 ESA.FEP.5025	ESA.FEP.1818 ESA.FEP.2510 ESA.FEP.2518 ESA.FEP.2525 ESA.FEP.5025 ESA.FEP.4040 ESA.FEP.8040	ESA.FEP.1818 ESA.FEP.2510 ESA.FEP.2518 ESA.FEP.2525 ESA.FEP.5025 ESA.FEP.4040 ESA.FEP.8040	ESA.FEP.1818 ESA.FEP.2510 ESA.FEP.2518 ESA.FEP.2525 ESA.FEP.5025 ESA.FEP.4040 ESA.FEP.8040	ESA.FEP.1818 ESA.FEP.2510 ESA.FEP.2518 ESA.FEP.2525 ESA.FEP.5025 ESA.FEP.4040 ESA.FEP.8040
	screws Accessorier							
	(Screws)	ESA.STC.M4.L182 ESA.STC.M4.L121	ESA.STC.M4.L182 ESA.STC.M4.L121	ESA.STC.M4.L182 ESA.STC.M4.L121	ESA.STC.M5.L162 ESA.STC.M5.L121	ESA.STC.M5.L162 ESA.STC.M5.L121	ESA.STC.M5.L162 ESA.STC.M5.L141	ESA.STC.M5.L182 ESA.STC.M5.L201
	(Single hole shim)	ESA.STS.M43	ESA.STS.M43	ESA.STS.M43	ESA.STS.M53	ESA.STS.M53	ESA.STS.M53	ESA.STS.M53
	(Double holes sh	ESA.STD.D08.M41	ESA.STD.D08.M41	ESA.STD.D08.M41	ESA.STD.D10.M51	ESA.STD.D10.M51	ESA.STD.D15.M51	ESA.STD.D15.M51
	T (T-Nuts)	ESA.STN.D08.M41	ESA.STN.D08.M41	ESA.STN.D08.M41	ESA.STN.D10.M51	ESA.STN.D10.M51	ESA.STN.D15.M51	ESA.STN.D15.M51
	Weight	24 g	23 g	22 g	38 g	40 g	55 g	95 g



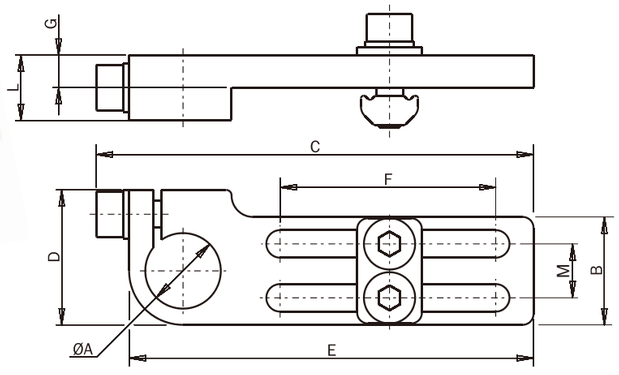

Application example

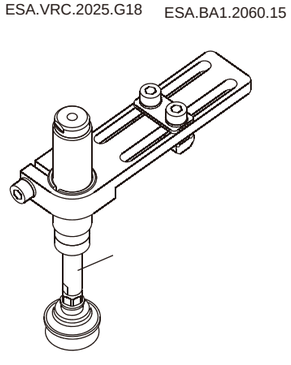

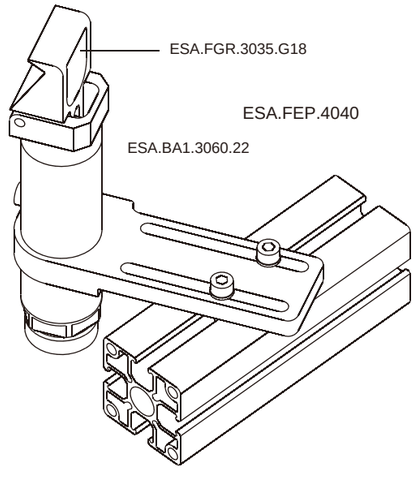

Heavy duty mounting bracket

(kit with screws)

	Model	ESA.BA2.1040.08	ESA.BA2.1240.08	ESA.BA2.1450.10	ESA.BA2.2060.15	ESA.BA2.3060.22
	PN	0245096	0248391	0245960	0247369	0243440
A	[mm]	Ø10	Ø12	Ø14	Ø20	Ø30
B	[mm]	16	16	20	25	35
C	[mm]	75	75	90.6	110.6	122.2
D	[mm]	20	20	25	30	42
E	[mm]	70	70	85	105	115
F	[mm]	40	40	50	60	60
L	[mm]	8.3	8.3	12	15	20
M	[mm]	8	8	10	15	22
	screws Accessorier					
	(Screws)	ESA.STC.M4.L182 ESA.STC.M4.L121	ESA.STC.M4.L182 ESA.STC.M4.L121	ESA.STC.M5.L222 ESA.STC.M5.L141	ESA.STC.M5.L252 ESA.STC.M5.L161	ESA.STC.M5.L302 ESA.STC.M6.L201
	(Single hole shim)	ESA.STS.M43	ESA.STS.M43	ESA.STS.M53	ESA.STS.M53	ESA.STS.M53 ESA.STS.M61
	(Double holes shim)	ESA.STD.D08.M41	ESA.STD.D08.M41	ESA.STD.D10.M51	ESA.STD.D15.M51	ESA.STD.D22.M51
	T (T-Nuts)	ESA.STN.D08.M41	ESA.STN.D08.M41	ESA.STN.D10.M51	ESA.STN.D15.M51	ESA.STN.D22.M51
	Weight	30 g	40 g	60 g	85 g	175 g

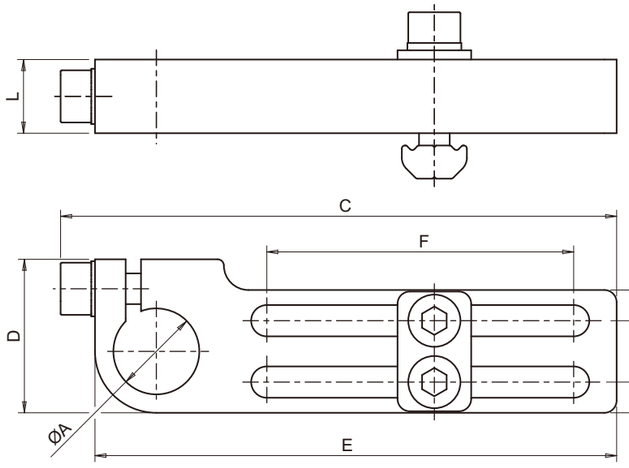



Application example

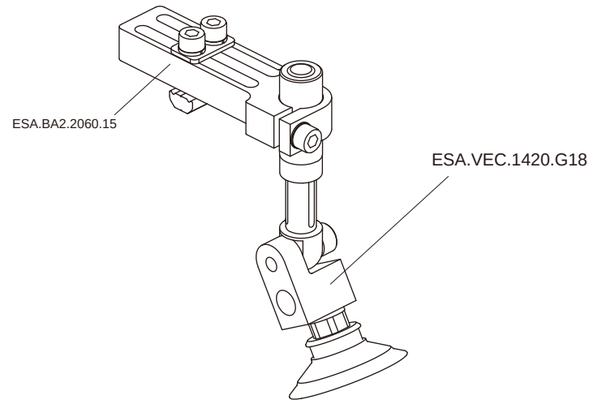

Heavy-duty mounting bracket with ball joint

(kit with screws)



	Model	ESA.BA2.R1040.10	ESA.BA2.R1450.15	ESA.BA2.R2060.22
	PN	0248709	0249326	0247575
A	[mm]	10	14	20
B	[mm]	20	25	35
C	[mm]	85	111.5	121.8
D	[mm]	25	31	42
E	[mm]	85	105	115
F	[mm]	40	50	60
G	[mm]	0-26°	0-26°	0-26°
L	[mm]	8.3	12	15
M	[mm]	10	15	22
		screws Accessorier		
	(Screws)	ESA.STC.M5.L182 ESA.STC.M4.L141	ESA.STC.M5.L181	ESA.STC.M5.L252 ESA.STC.M6.L181
	(Single hole shim)	ESA.STS.M52 ESA.STS.M41	ESA.STS.M53	ESA.STS.M52 ESA.STS.M61
	(Double holes shim)	ESA.STD.D10.M51	ESA.STD.D15.M51	ESA.STD.D22.M51
T	(T-Nuts)	ESA.STN.D10.M51	ESA.STN.D15.M51	ESA.STN.D22.M51
	Weight	45 g	86 g	160 g

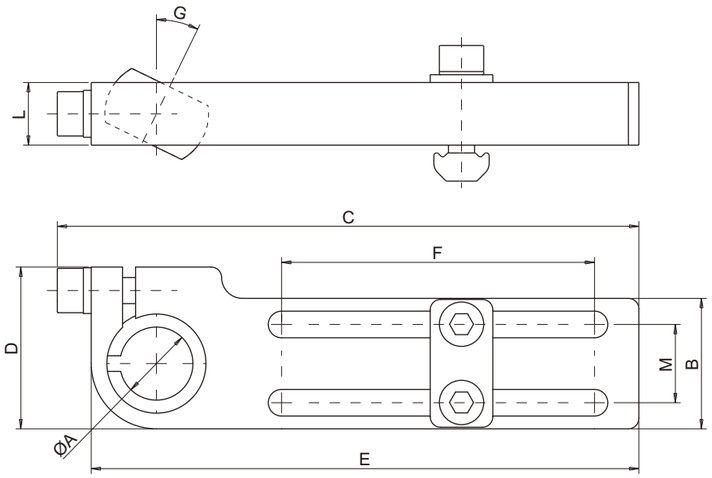

Application example

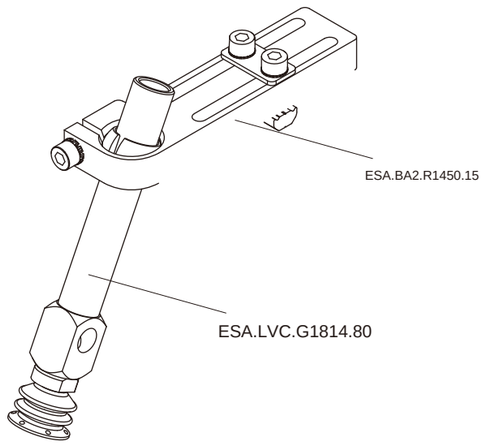

Slotted angular bracket

(kit with screws)

	Model	ESA.BA3.1020.08	ESA.BA3.1220.08	ESA.BA3.1430.15	ESA.BA3.2040.15	ESA.BA3.3050.22
	PN	0244406	0243558	0244042	0248147	0241165
A	[mm]	Ø10	Ø10	Ø14	Ø20	Ø30
B	[mm]	15	15	21	26	32
C	[mm]	23	23	31	39	49
D	[mm]	14	14	17.5	22.5	29
E	[mm]	64.5	64.5	85.5	107.5	136.5
F	[mm]	16	16	25	25	36
G	[mm]	8	8	15	15	22
H	[mm]	4.1	4.1	5.1	5.1	5.1
I	[mm]	-	-	15	15	22
L	[mm]	20	20	30	40	50
M	[mm]	16	16	20	25	36
N	[mm]	-	-	Ø5.1	Ø5.1	Ø5.1
P	[mm]	9	9	11	13	16
				screws Accessorier		
	(Screws)	ESA.STC.M4.L182 ESA.STC.M4.L162	ESA.STC.M4.L182 ESA.STC.M4.L162	ESA.STC.M5.L222 ESA.STC.M5.L252	ESA.STC.M5.L252 ESA.STC.M5.L162	ESA.STC.M5.L252 ESA.STC.M5.L352
	(Single hole shim)	ESA.STS.M44	ESA.STS.M44	ESA.STS.M54	ESA.STS.M54	ESA.STS.M54
	(Double holes shim)	ESA.STD.D08.M41	ESA.STD.D08.M41	ESA.STD.D15.M51	ESA.STD.D15.M51	ESA.STD.D22.M51
T	(T-Nuts)	ESA.STN.D08.M41	ESA.STN.D08.M41	ESA.STN.D15.M51	ESA.STN.D15.M51	ESA.STN.D22.M51
	Weight	30 g	35 g	50 g	90 g	185 g

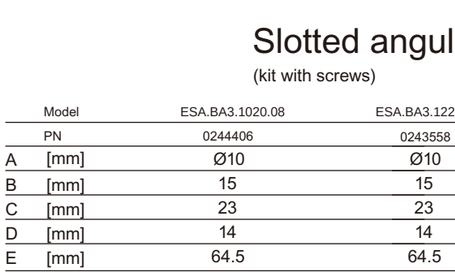

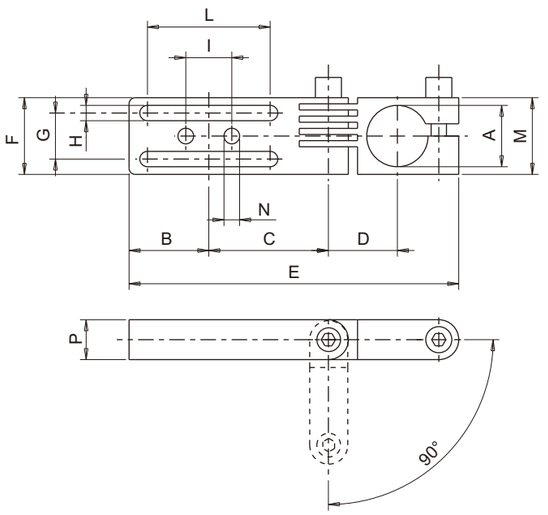

Application example

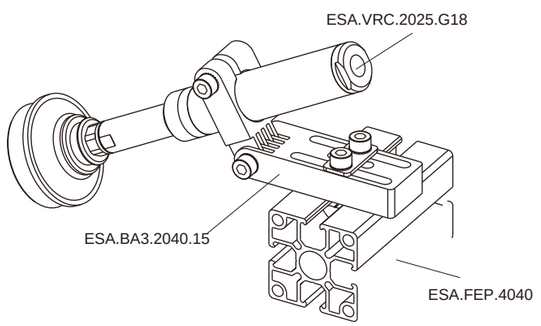

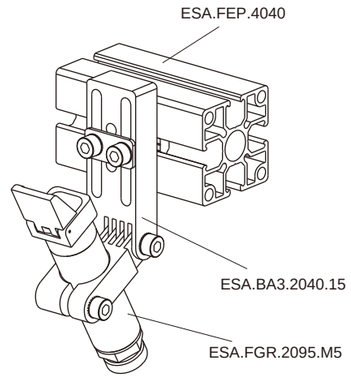

Mounting bracket

(kit with screws)

	Model	ESA.BA4.1425.15	ESA.BA4.2025.22	ESA.BA4.2040.22	ESA.BA4.3025.30	ESA.BA4.3040.30
	PN	0241300	0248631	0245306	0243656	0240353
A	[mm]	Ø14	Ø20	Ø20	Ø30	Ø30
B	[mm]	25	32	35	40	45
C	[mm]	42.6	47.6	54.1	53.1	64.1
D	[mm]	40	45	54.5	55	65.5
E	[mm]	22	24.5	33	29.5	39
F	[mm]	12.5	12.5	20	12.5	20
G	[mm]	19.5	24.5	26.5	34.5	37.5
H	[mm]	25	30	35	30	40
Compatible with:		ESA.FEP.2525 ESA.FEP.5025	ESA.FEP.2525 ESA.FEP.5025	ESA.FEP.4040 ESA.FEP.8040	ESA.FEP.2525 ESA.FEP.5025	ESA.FEP.4040 ESA.FEP.8040
		screws Accessorier				
	(Screws)	ESA.STC.M5.L182 ESA.STC.M5.L181	ESA.STC.M5.L162 ESA.STC.M5.L201	ESA.STC.M5.L162 ESA.STC.M5.L201	ESA.STC.M5.L162 ESA.STC.M5.L301	ESA.STC.M5.L162 ESA.STC.M5.L302
	(Single hole shim)	ESA.STS.M51	ESA.STS.M53	ESA.STS.M53	ESA.STS.M53	ESA.STS.M53
T	(T-Nuts)	ESA.STN.D15.M51	ESA.STN.D22.M51	ESA.STN.D22.M51	ESA.STN.D30.M51	ESA.STN.D30.M51
Weight		50 g	70 g	95 g	90 g	150 g



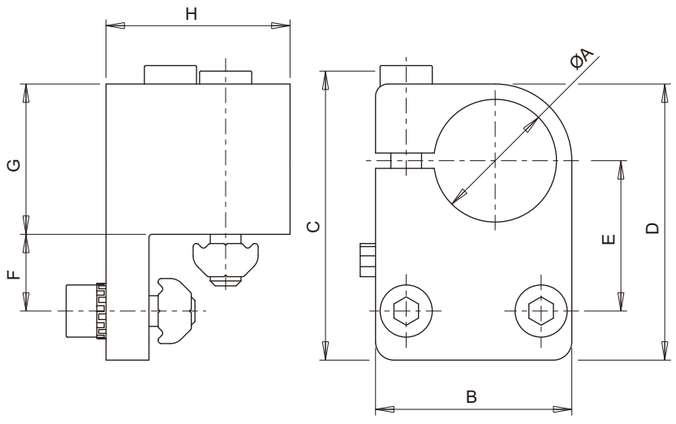

Application example

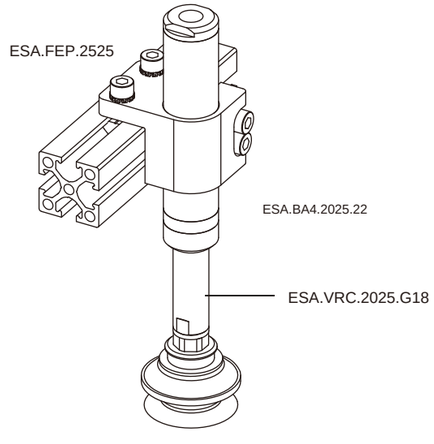

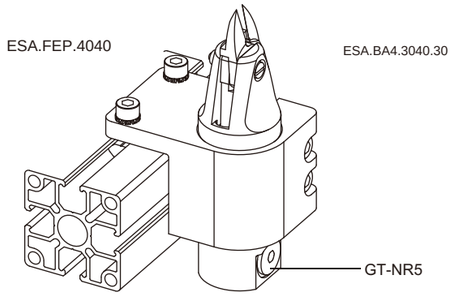

Mounting bracket

(kit with screws)

PN	Model	A [mm]	B [mm]	C [mm]	D [mm]	E [mm]	F [mm]	G [mm]	Weight
0244394	ESA.BA5.G1840.10	G1/8”	20	75	40	19	6	10	25 g
0241750	ESA.BA5.G1860.15	G1/8”	25	105	60	26.5	6	15	42 g
0245626	ESA.BA5.M1040.10	M10x1	20	75	40	19	6	10	30 g
0243040	ESA.BA5.M1060.15	M10x1	25	105	60	26.5	6	15	40 g
0243045	ESA.BA5.M1240.10	M12x1	20	75	40	19	6	10	30 g
0248160	ESA.BA5.M1260.15	M12x1	25	105	60	26.5	6	15	47 g
0241797	ESA.BA5.M1440.10	M14x1	20	75	40	19	6	10	20 g
0240818	ESA.BA5.M1460.15	M14x1	25	105	60	26.5	6	15	40 g
0243336	ESA.BA5.M1640.10	M16x1	20	75	40	19	6	10	20 g
0248911	ESA.BA5.M1660.15	M16x1	25	105	60	26.5	6	15	40 g
0247175	ESA.BA5.M2040.15	M20x1	25	75	40	19	6	15	30 g
0244296	ESA.BA5.M2060.15	M20x1	25	105	60	26.5	6	15	35 g

Accessorier selection

	(Screws)	ESA.STC.M5.L16*2	ESA.BA5.G1840.10	ESA.BA5.M1440.10
	(Single hole shim)	ESA.STS.M5*2	ESA.BA5.M1040.10	ESA.BA5.M1640.10
	(Double holes shim)	ESA.STD.M5.D10*1	ESA.BA5.M1240.10	
T	(T-Nuts)	ESA.STN.M5.D10*1		
	(Screws)	ESA.STC.M5.L16*2	ESA.BA5.G1860.15	ESA.BA5.M1460.15
	(Single hole shim)	ESA.STS.M5*2	ESA.BA5.M1060.15	ESA.BA5.M1660.15
	(Double holes shim)	ESA.STD.M5.D10*1	ESA.BA5.M1260.15	ESA.BA5.M2040.15
T	(T-Nuts)	ESA.STN.M5.D10*1		

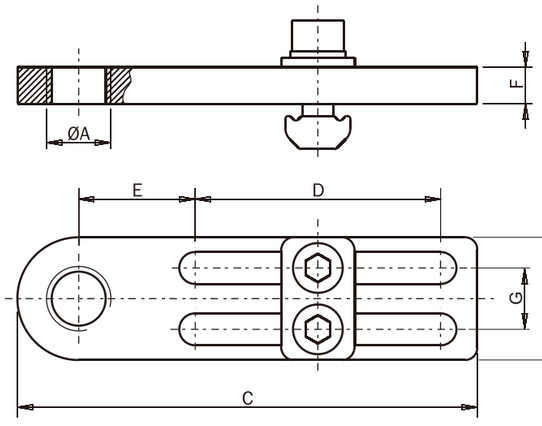

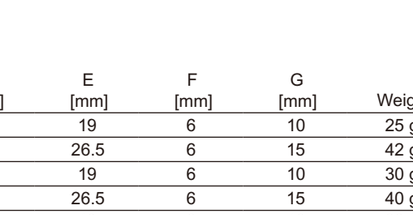

Application example

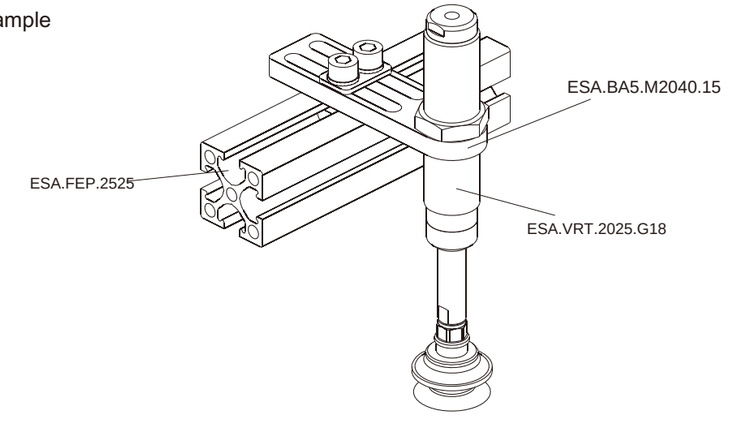

Mounting bracket

(kit with screws)

PN	Model	Type	A [mm]	B [mm]	C [mm]	D [mm]	E [mm]	F [mm]	G [mm]	H [mm]	Weight
0246566	ESA.BA6.1040.15	L	Ø10.5	30	100	40	42.5	3	20	38	60 g
0240728	ESA.BA6.1240.15	L	Ø12.5	30	100	40	42.5	3	20	38	60 g
0249704	ESA.BA6.1440.15	L	Ø14.5	30	100	40	42.5	3	24	38	60 g
0245265	ESA.BA6.1640.15	L	Ø16.5	30	100	40	42.5	3	30	-	65 g
0240489	ESA.BA6.2040.15	L	Ø20.5	30	100	40	42.5	3	30	-	60 g
0240973	ESA.BA6.2240.15	L	Ø22.5	30	100	40	42.5	5	35	26	105 g
0245426	ESA.BA6.2540.15	L	Ø25.5	30	100	40	42.5	5	35	26	100 g
0241227	ESA.BA6.1028.15	S	Ø10.5	30	65	28	15.5	3	-	-	45 g
0245721	ESA.BA6.1228.15	S	Ø12.5	30	65	28	15.5	3	-	-	45 g
0248424	ESA.BA6.1428.15	S	Ø14.5	30	65	28	15.5	3	-	-	45 g
0246133	ESA.BA6.1628.15	S	Ø16.5	30	65	28	15.5	3	-	-	45 g
0242429	ESA.BA6.2028.15	S	Ø20.5	30	65	28	15.5	3	-	-	40 g
0244646	ESA.BA6.2228.15	S	Ø22.5	30	70	28	17	5	35	26	75 g
0246555	ESA.BA6.2528.15	S	Ø25.5	30	70	28	17	5	35	26	70 g

Accessorier selection

	(Screws)	ESA.STC.M5.L12*2
	(Single hole shim)	ESA.STS.M5*2
	(Double holes shim)	ESA.STD.M5.D15*1
T	(T-Nuts)	ESA.STN.M5.D15*1

ESA.BA6.1040.15	ESA.BA5.2040.15	ESA.BA5.1028.15	ESA.BA5.2028.15
ESA.BA6.1240.15	ESA.BA5.2240.15	ESA.BA5.1228.15	ESA.BA5.2228.15
ESA.BA5.1440.15	ESA.BA5.2540.15	ESA.BA5.1428.15	ESA.BA5.2528.15
ESA.BA5.1640.15		ESA.BA5.1628.15	

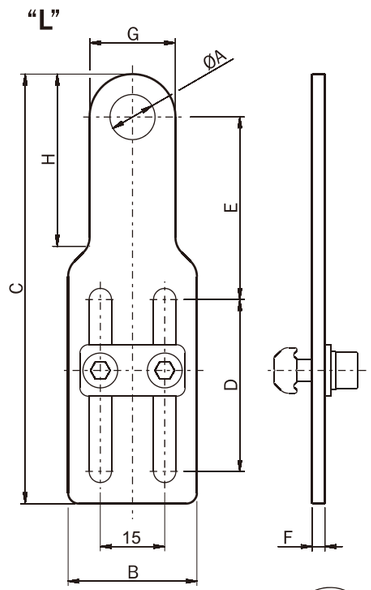

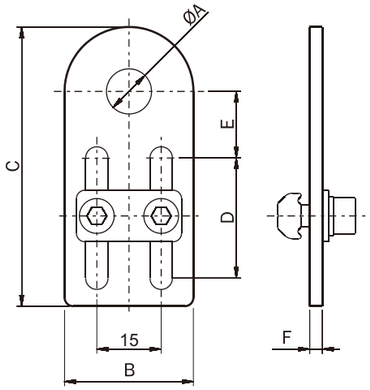

Application example

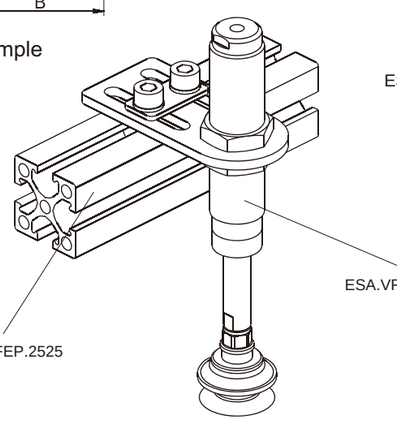

ESA.BA5.2028.15



Direct connector for vacuum cup

(kit with screws)

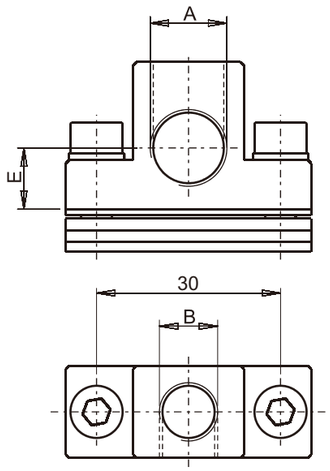

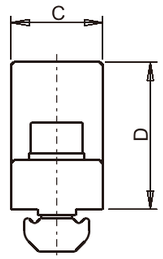

	Model	ESA.BVA.G1818.30	ESA.BVA.G1418.30
	PN	0249525	0241395
A	[mm]	G1/8"	G1/4"
B	[mm]	G1/8"	G1/8"
C	[mm]	15	15
D	[mm]	24	24
E	[mm]	12	10
Compatible with:		ESA.FEP.1818	-
		ESA.FEP.2510	ESA.FEP.2510
		ESA.FEP.2518	ESA.FEP.2518
		ESA.FEP.2525	ESA.FEP.2525
		ESA.FEP.5025	ESA.FEP.5025
		ESA.FEP.4040	ESA.FEP.4040
		ESA.FEP.8040	ESA.FEP.8040
		screws Accessorier	
	(Screws)	ESA.STC.M5.L16*2	ESA.STC.M5.L16*2
	(Single hole shim)	ESA.STS.M5*2	ESA.STS.M5*2
T	(T-Nuts)	ESA.STN.D30.M5*1	ESA.STN.D30.M5*1
Weight		42 g	40 g



Application example

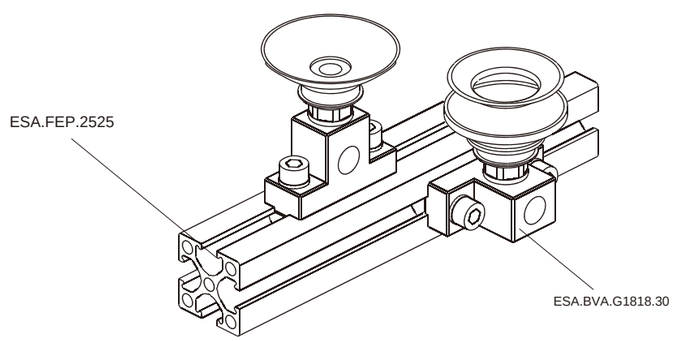

Mounting bracket for vacuum cup

(kit with screws)

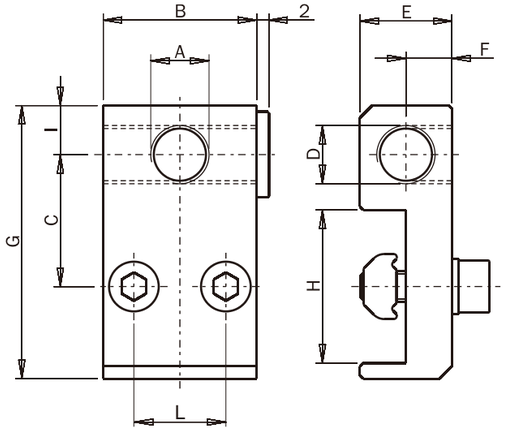

	Model	ESA.BVB.M5M5.08	ESA.BVB.G1818.15	ESA.BVB.G1418.15
	PN	0242820	0249320	0241869
A	[mm]	M5	G1/8”	G1/4”
B	[mm]	16	25	25
C	[mm]	13.5	21.5	21.5
D	[mm]	M5	G1/8”	G1/8”
E	[mm]	8	15	15
F	[mm]	4	7.5	7.5
G	[mm]	29	44.5	46.5
H	[mm]	18	25	25
I	[mm]	4.3	8	10
L	[mm]	8	15	15
Compatible with:		ESA.FEP.1818	ESA.FEP.2510	ESA.FEP.2510
		-	ESA.FEP.2518	ESA.FEP.2518
		-	ESA.FEP.2525	ESA.FEP.2525
		-	ESA.FEP.5025	ESA.FEP.5025
		screws Accessorier		
	(Screws)	ESA.STC.M4.L12 2	ESA.STC.M5.L16 2	ESA.STC.M5.L16 2
	(Single hole shim)	ESA.STS.M4 2	ESA.STS.M5 2	ESA.STS.M5 2
T	(T-Nuts)	ESA.STN.D08.M4 1	ESA.STN.D15.M5 1	ESA.STN.D15.M5 1
Weight		15 g	45 g	45 g



Application example

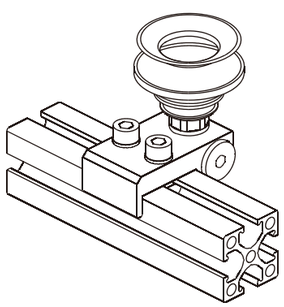

ESA.BVB.G1818.15

ESA.FEP.2525

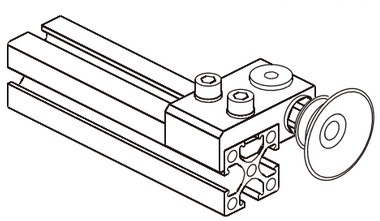

ESA.FEP.2525

ESA.BVB.G1818.15

Long mounting bracket for vacuum cup

(kit with screws)

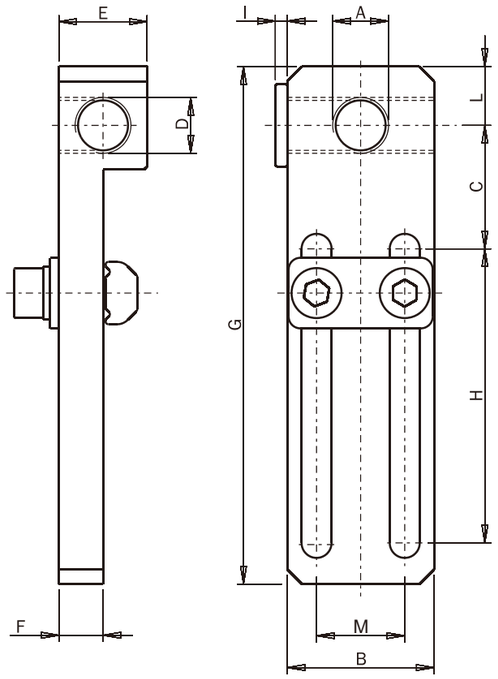

	Model	ESA.BVC.M5M5.08	ESA.BVC.G1818.15	ESA.BVC.G1418.15
	PN	0244952	0242882	0249431
A	[mm]	M5	G1/8”	G1/4”
B	[mm]	16	25	25
C	[mm]	14	21	21
D	[mm]	M5	G1/8”	G1/8”
E	[mm]	8	15	15
F	[mm]	4	7.5	7.5
G	[mm]	65	88	88
H	[mm]	40	50	50
I	[mm]	2	2	2
L	[mm]	6	10	10
M	[mm]	8	15	15
Compatible with:		ESA.FEP.1818	ESA.FEP.1818	ESA.FEP.1818
		ESA.FEP.2510	ESA.FEP.2510	ESA.FEP.2510
		ESA.FEP.2518	ESA.FEP.2518	ESA.FEP.2518
		ESA.FEP.2525	ESA.FEP.2525	ESA.FEP.2525
		ESA.FEP.5025	ESA.FEP.5025	ESA.FEP.5025
		-	ESA.FEP.4040	ESA.FEP.4040
		-	ESA.FEP.8040	ESA.FEP.8040
		screws Accessorier		
	(Screws)	ESA.STC.M4.L12 2	ESA.STC.M5.L16 2	ESA.STC.M5.L16 2
	(Single hole shim)	ESA.STS.M4 2	ESA.STS.M5 2	ESA.STS.M5 2
	(Double holes shim)	ESA.STD.D08.M4 1	ESA.STD.D15.M5 1	ESA.STD.D15.M5 1
T	(T-Nuts)	ESA.STN.D08.M4 1	ESA.STN.D15.M5 1	ESA.STN.D15.M5 1
Weight		20 g	60 g	60 g



Application example

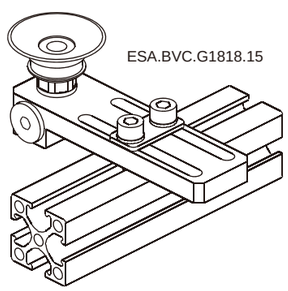

ESA.BVC.G1818.15

ESA.FEP.2525

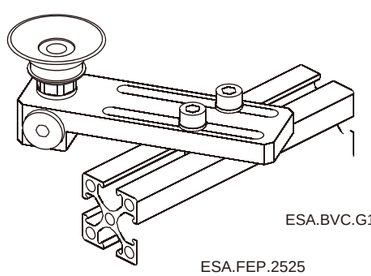

ESA.BVC.G1818.15

ESA.FEP.2525

Adjustable angle connector for vacuum cup

(kit with screws)

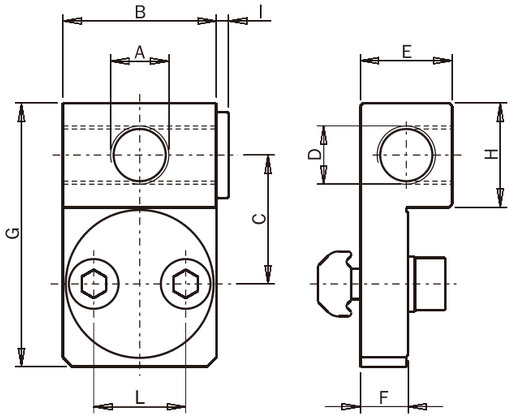

	Model	ESA.BVD.M5M5.08	ESA.BVD.G1818.15	ESA.BVD.G1418.15
	PN	0243149	0248770	0240954
A	[mm]	M5	G1/8”	G1/4”
B	[mm]	16	25	25
C	[mm]	13	21	21
D	[mm]	M5	G1/8”	G1/8”
E	[mm]	10	15	15
F	[mm]	5.3	7.8	7.8
G	[mm]	28	43	43
H	[mm]	10	17	17
I	[mm]	2	2	2
L	[mm]	8	15	15
Compatible with:		ESA.FEP.1818	-	-
		ESA.FEP.2510	ESA.FEP.2510	ESA.FEP.2510
		ESA.FEP.2518	ESA.FEP.2518	ESA.FEP.2518
		ESA.FEP.2525	ESA.FEP.2525	ESA.FEP.2525
		ESA.FEP.5025	ESA.FEP.5025	ESA.FEP.5025
		-	ESA.FEP.4040	ESA.FEP.4040
		-	ESA.FEP.8040	ESA.FEP.8040
			screws Accessorier	
	(Screws)	ESA.STC.M4.L12	ESA.STC.M5.L16	ESA.STC.M5.L16
	(Single hole shim)	ESA.STS.M4	ESA.STS.M5	ESA.STS.M5
T	(T-Nuts)	ESA.STN.D08.M4	ESA.STN.D15.M5	ESA.STN.D15.M5
Weight		15 g	45 g	42 g

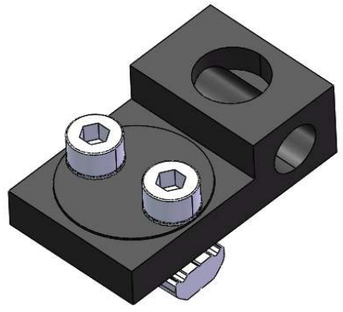

Application example

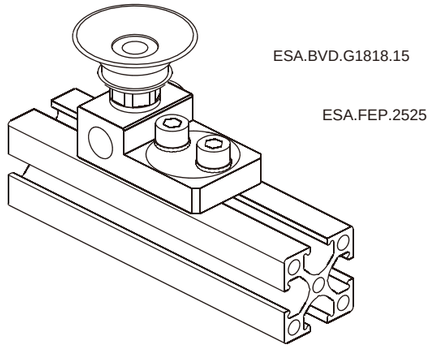

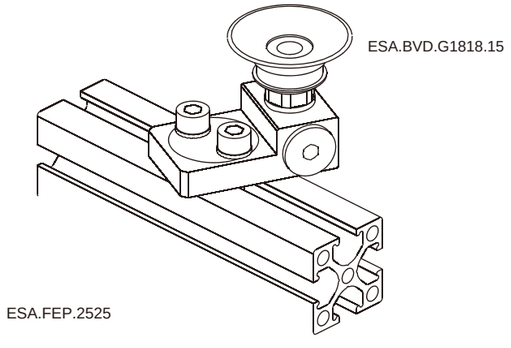

Leg for vacuum cup

PN	Model	A1 [mm]	A2 [mm]	B [mm]	C [mm]	D [mm]	E [mm]	F [mm]	Weight
0249142	ESA.LVC.M510.30	M5	M5	Ø10	11	30	6	16	10 g
0244730	ESA.LVC.M510.60	M5	M5	Ø10	11	60	6	16	13 g
0244383	ESA.LVC.M510.90	M5	M5	Ø10	11	90	6	16	17 g
0245553	ESA.LVC.M512.30	M5	M5	Ø12	13	30	7	17	12 g
0249506	ESA.LVC.M512.60	M5	M5	Ø12	13	60	7	17	15 g
0248728	ESA.LVC.M512.90	M5	M5	Ø12	13	90	7	17	19 g
0248994	ESA.LVC.G1814.40	G1/8”	G1/8”	Ø14	15	40	8	22	17 g
0246276	ESA.LVC.G1814.80	G1/8”	G1/8”	Ø14	15	80	8	22	25 g
0244564	ESA.LVC.G1814.120	G1/8”	G1/8”	Ø14	15	120	8	22	32 g
0241298	ESA.LVC.G1420.50	G1/8”	G1/4”	Ø20	20	50	8	23	40 g
0247942	ESA.LVC.G1420.100	G1/8”	G1/4”	Ø20	20	100	8	23	60 g
0246335	ESA.LVC.G1420.150	G1/8”	G1/4”	Ø20	20	150	8	23	75 g

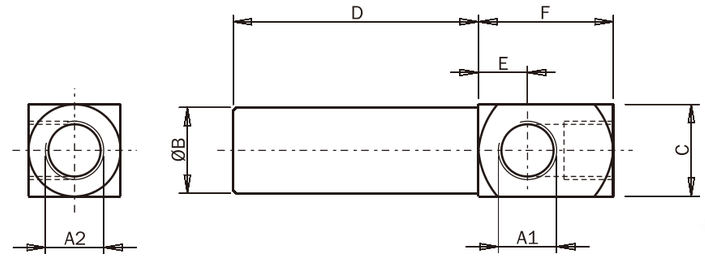



Application example

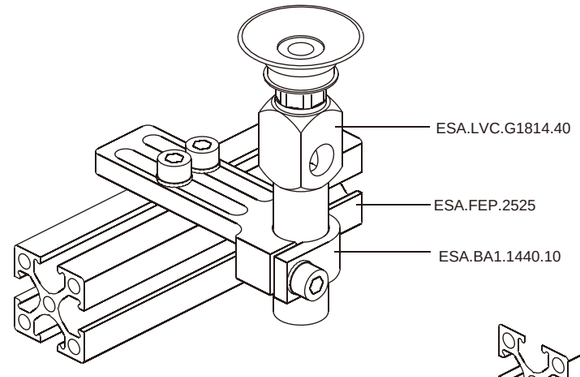

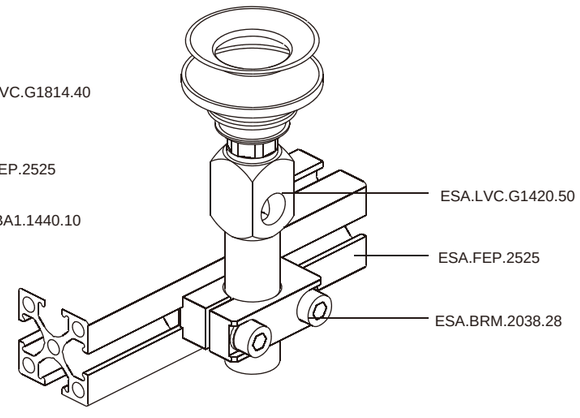

Mounting adapter for vacuum cup

	Model	ESA.MAV.M5M5	ESA.MAV.G18G18	ESA.MAV.M4M5	ESA.MAV.M3M5
	PN	0243052	0246595	0246761	0248252
A	[mm]	M5	G1/8	M4	M3
B	[mm]	M5	G1/8	M5	M5
C	[mm]	8	13	8	8
D	[mm]	8	16	8	8
E	[mm]	5	6.5	5	4
F	[mm]	14	21	12	12
Weight		2.2 g	11.6 g	1.8 g	1.6 g

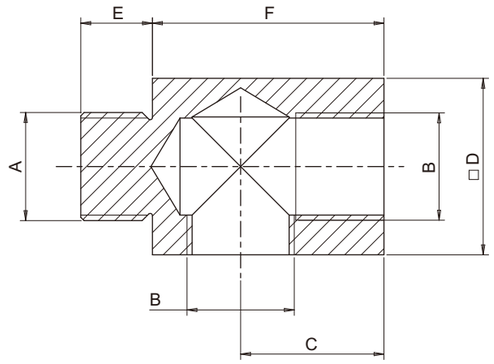



Application example

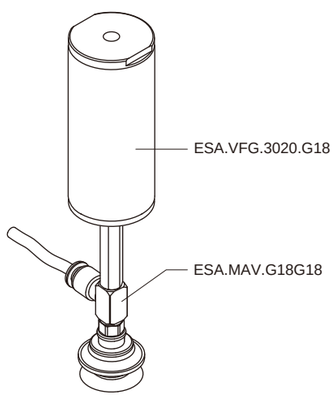

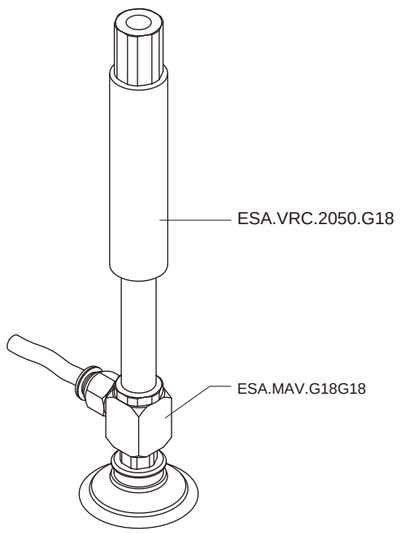

Clamp leg

(kit with screws)

PN	Model	A [mm]	B [mm]	C [mm]	D [mm]	E [mm]	F [mm]	G [mm]	H [mm]	L [mm]	Weight
0244686	ESA.CLA.1010.30	Ø10	Ø10	14	30	7	19	19	M4	10	10 g
0242034	ESA.CLA.1010.60	Ø10	Ø10	14	60	7	19	19	M4	10	15 g
0241909	ESA.CLA.1010.90	Ø10	Ø10	14	90	7	19	19	M4	10	20 g
0240906	ESA.CLA.1212.30	Ø12	Ø12	19	30	7	21	21	M4	12	13 g
0244929	ESA.CLA.1212.60	Ø12	Ø12	19	60	7	21	21	M4	12	18 g
0249190	ESA.CLA.1212.90	Ø12	Ø12	19	90	7	21	21	M4	12	23 g
0249293	ESA.CLA.1414.40	Ø14	Ø14	18	40	10	26	24	M5	14	20 g
0244704	ESA.CLA.1414.80	Ø14	Ø14	18	80	10	26	24	M5	14	30 g
0248187	ESA.CLA.1414.120	Ø14	Ø14	18	120	10	26	24	M5	14	40 g
0247964	ESA.CLA.2020.50	Ø20	Ø20	25	50	13	32	32	M6	20	45 g
0249829	ESA.CLA.2020.100	Ø20	Ø20	25	100	13	32	32	M6	20	70 g
0245021	ESA.CLA.2020.150	Ø20	Ø20	25	150	13	32	32	M6	20	105 g
0243955	ESA.CLA.3030.80	Ø30	Ø30	40	80	19	44	46	M6	30	170 g
0242995	ESA.CLA.3030.140	Ø30	Ø30	40	140	19	44	46	M6	30	230 g
0240223	ESA.CLA.3030.200	Ø30	Ø30	40	200	19	44	46	M6	30	300 g



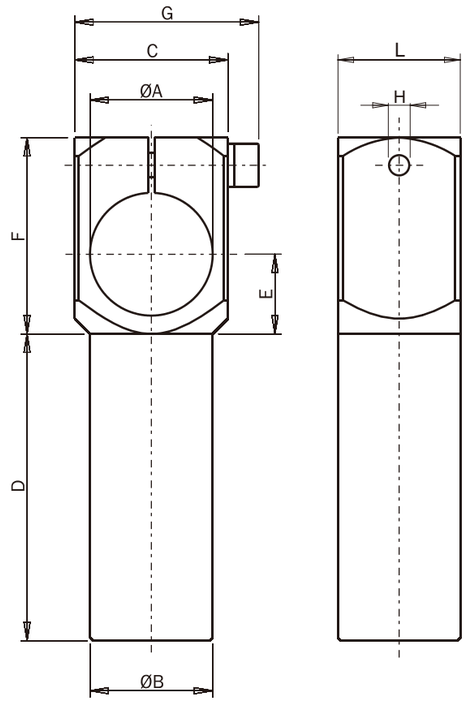

Application example

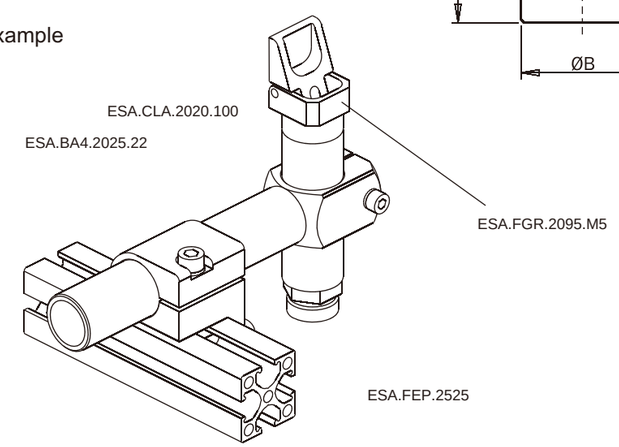

Quick changer
Eoat components
Gripp components
Vacuum components
Fitting
AIR NIPPERS
STATIC SOLUTIONS

Clamp leg

(kit with screws)

	Model	ESA.CLA.1010.15	ESA.CLA.1212.15	ESA.CLA.1414.20	ESA.CLA.2020.25	ESA.CLA.3030.25	ESA.CLA.3030.40
	PN	0249862	0243848	0242567	0246259	0240014	0241131
A	[mm]	Ø10	Ø12	Ø14	Ø20	Ø30	Ø30
B	[mm]	Ø10	Ø12	Ø14	Ø20	Ø20	Ø30
C	[mm]	14x10	19x12	18x14	25x20	40x20	40x30
D	[mm]	15	15	20	25	25	40
E	[mm]	7	7	10	13	19	19
F	[mm]	19	21	26	32	44	44
G	[mm]	19	21	24	30	45	47
Weight		8 g	8 g	15 g	35 g	60 g	130 g

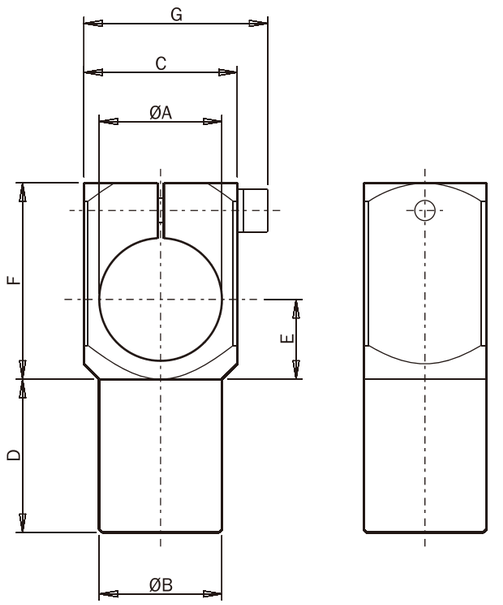



Application example

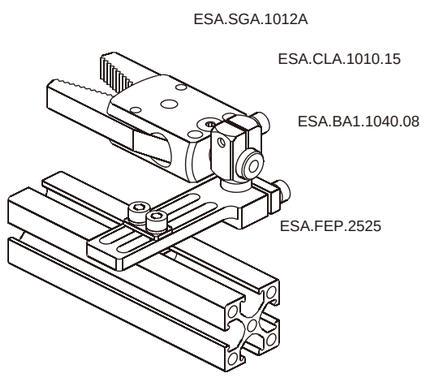

Heavy duty clamp leg

(kit with screws)

Model	ESA.HCL.1414.120
PN	0240009
Weight	50 g

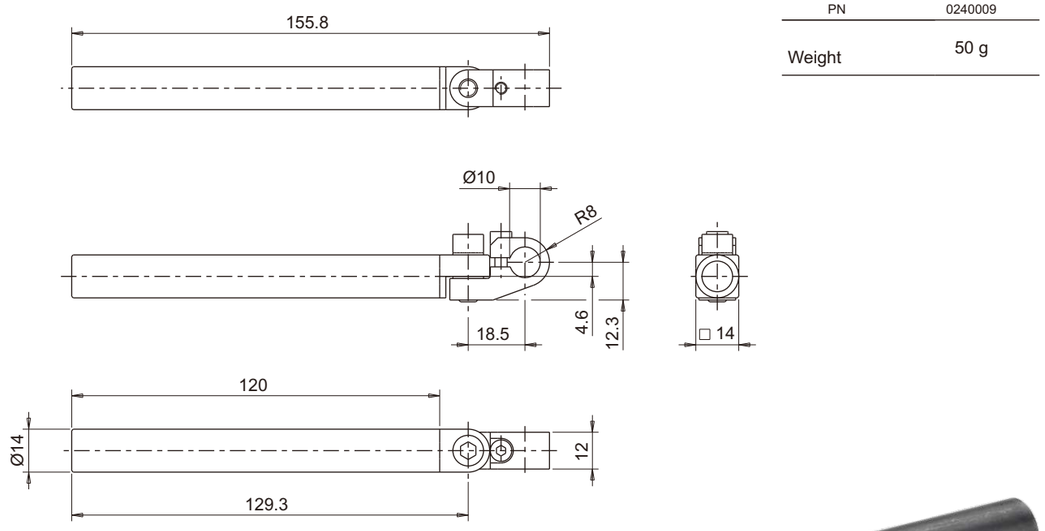



Application example

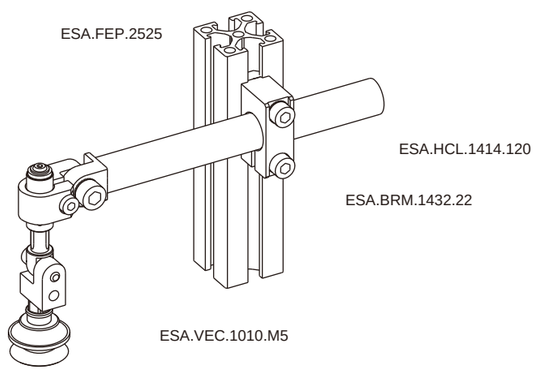

Side manifold block (1 channel)

(kit with screws)



G1/8” (x5)



G1/8” (x9)

	Model	ESA.SMB.05G18.25	ESA.SMB.09G18.25	ESA.SMB.05G18.40	ESA.SMB.09G18.40
	PN	0241702	0242749	0245191	0242788
Compatible with:		ESA.FEP.2518	ESA.FEP.2518	ESA.FEP.4040	ESA.FEP.4040
		ESA.FEP.2525	ESA.FEP.2525	ESA.FEP.4080	ESA.FEP.4080
		ESA.FEP.5025	ESA.FEP.5025	ESA.FEP.5025	ESA.FEP.5025
	screws Accessorier				
	(Screws)	ESA.STC.M5.L12	ESA.STC.M5.L12	ESA.STC.M5.L14	ESA.STC.M5.L14
	(Single hole shim)	ESA.STS.M5	ESA.STS.M5	ESA.STS.M5	ESA.STS.M5
T	(T-Nuts)	ESA.STN.M5	ESA.STN.M5	ESA.STN.M5	ESA.STN.M5
Weight		30 g	50 g	35 g	55 g

ESA.SMB.05G18.25

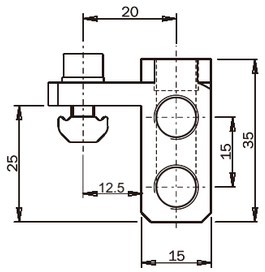

ESA.SMB.05G18.40

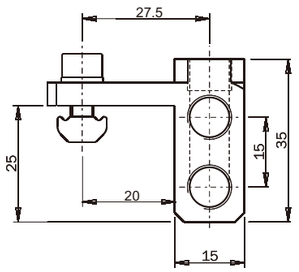

ESA.SMB.09G18.25

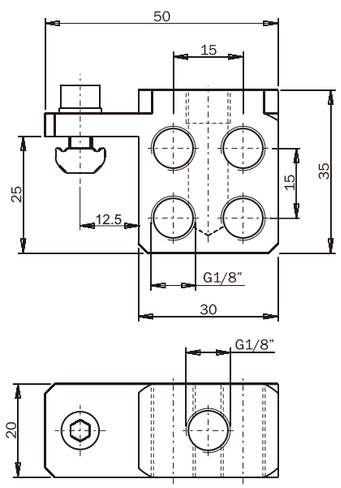

ESA.SMB.09G18.40

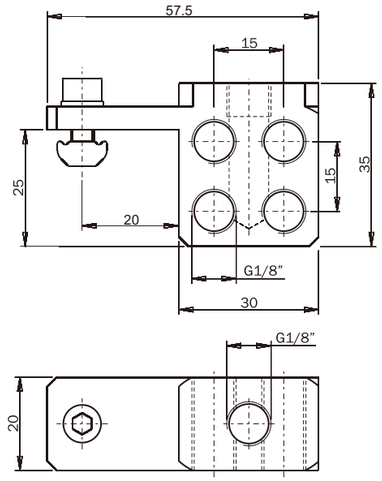

Application example

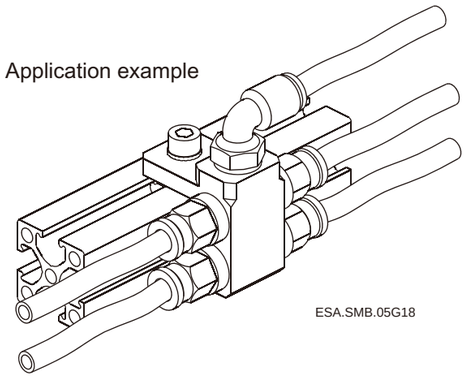

ESA.SMB.05G18

Side manifold block (2 channels)

(kit with screws)



	Model	ESA.SMB.D5G18.25	ESA.SMB.D5G18.40
	PN	0247606	0248063
Compatible with:		ESA.FEP.2518	ESA.FEP.4040
		ESA.FEP.2525	ESA.FEP.4080
		ESA.FEP.5025	-
	screws Accessorier		
	(Screws)	ESA.STC.M5.L12	ESA.STC.M5.L14
	(Single hole shim)	ESA.STS.M5	ESA.STS.M5
T	(T-Nuts)	ESA.STN.M5	ESA.STN.M5
Weight		48 g	53 g

ESA.SMB.D5G18.25

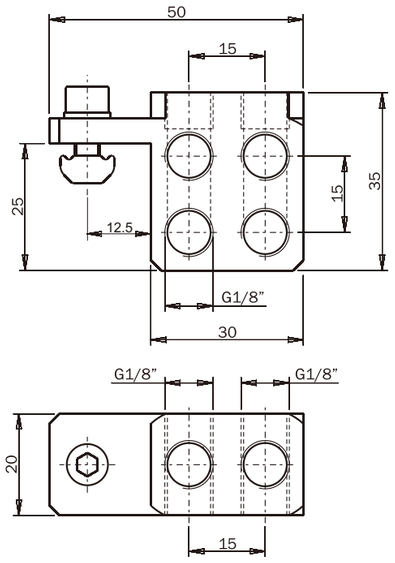

ESA.SMB.D5G18.40

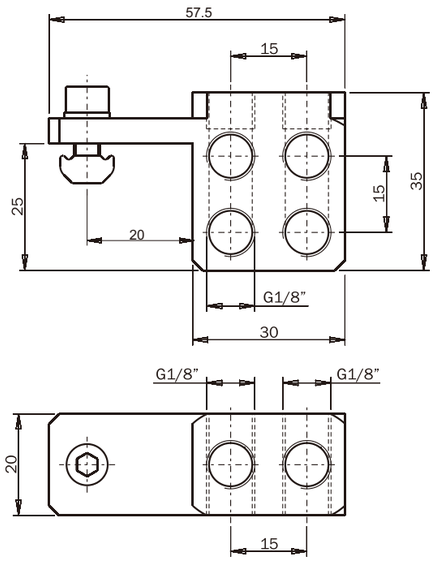

Application example

ESA.FEP.2525

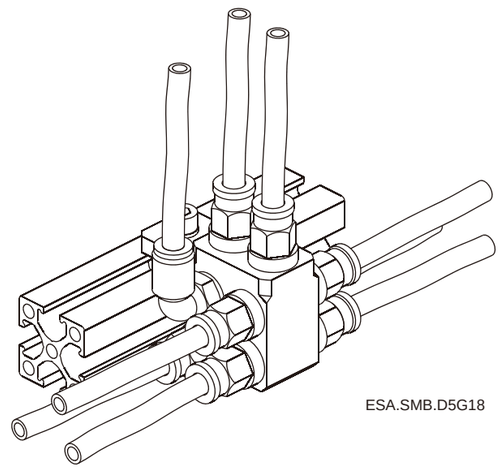

ESA.SMB.D5G18

Manifold block

(kit with screws)

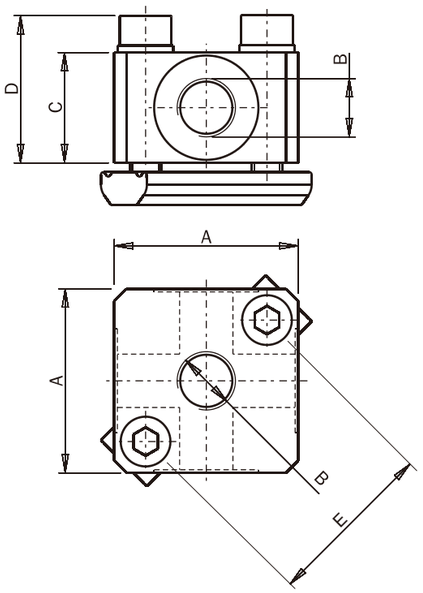

	Model	ESA.SMB.A5G18	ESA.SMB.A5G14
	PN	0240910	0241748
A	[mm]	30	40
B	[mm]	(x5) G1/8”	(x5) G1/4”
C	[mm]	18	20
D	[mm]	24	23
E	[mm]	28	35
		screws Accessorier	
	(Screws)	ESA.STC.M5.L252	ESA.STC.M5.L252
	(Single hole shim)	ESA.STS.M52	ESA.STS.M52
T	(T-Nuts)	ESA.STN.D28.M51	ESA.STN.D35.M51
Weight		50 g	80 g



Application example

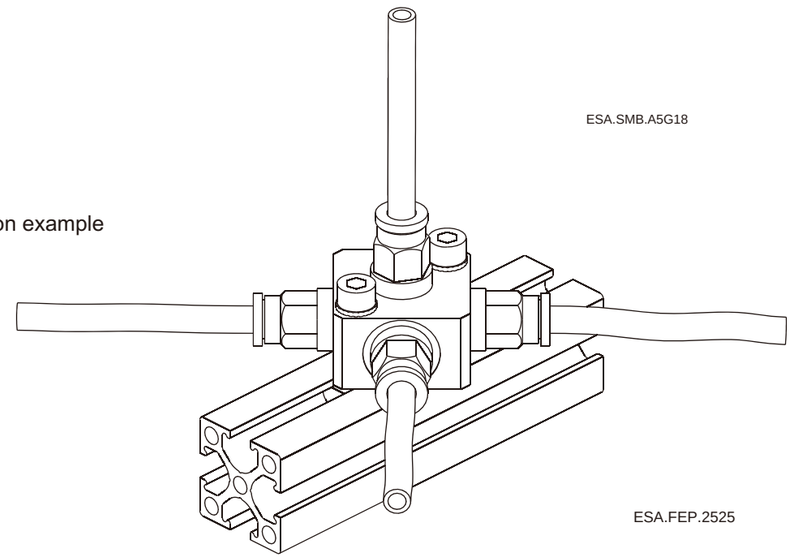

Swivelling support

(kit with screws)

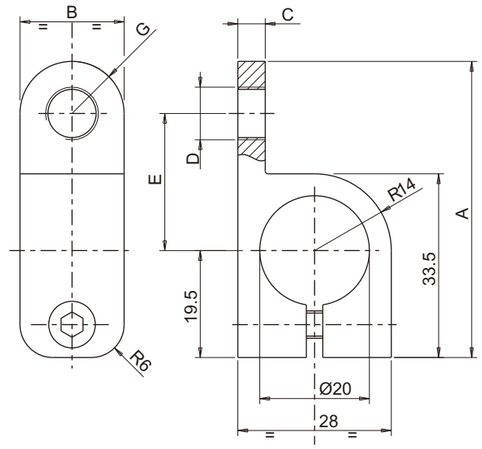

	Model	ESA.SWS.20G18	ESA.SWS.20M16
	PN	0243863	0243008
A	[mm]	53.5	60.5
B	[mm]	19	24
C	[mm]	5	6
D	[mm]	G1/8”	M16x1
E	[mm]	25	29
G	[mm]	R9.5	R12
Weight		30 g	40 g



Application example

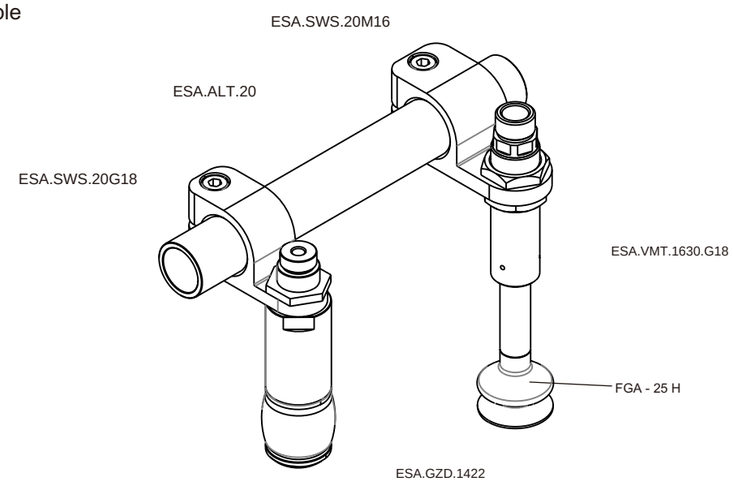

Cross connection block

(kit with screws)

	Model	ESA.CCB.1020	ESA.CCB.1420
	PN	0240979	0245227
A	[mm]	54	56
B	[mm]	32.5	30.5
C	[mm]	14	18
D	[mm]	Ø10	Ø14
E	[mm]	19	22
Weight		40 g	45 g

Model	ESA.CCB.2020
PN	0244876
Weight	70 g

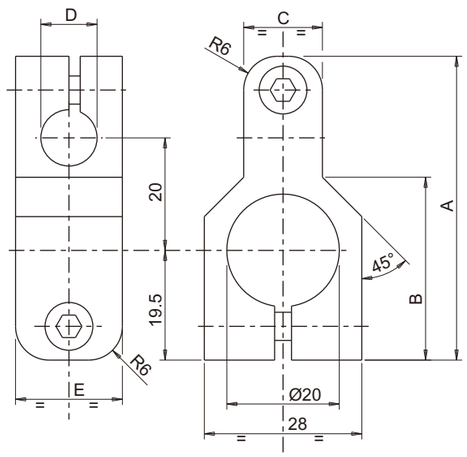

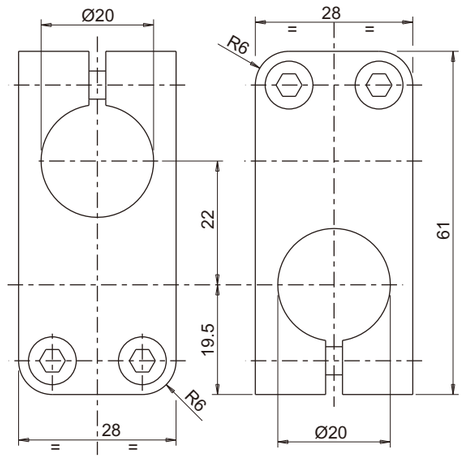





ESA.CCB.2020

Application example

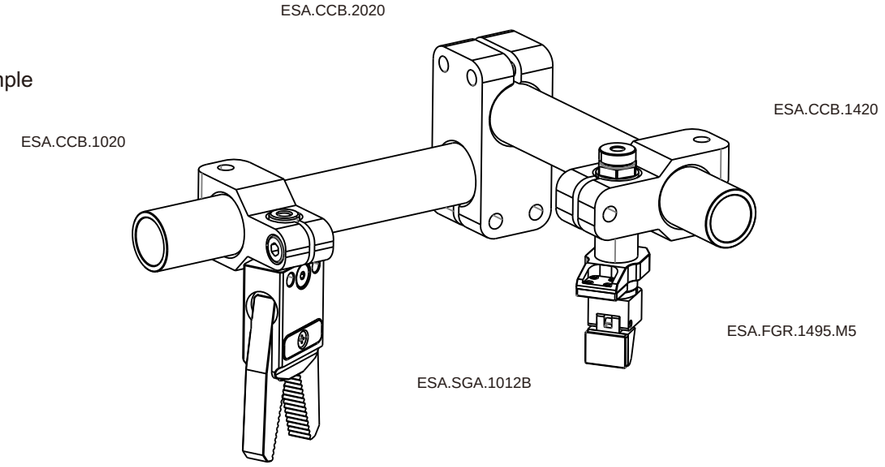

Elbow arm

(kit with screws)

PN	Model	A [mm]	B [mm]	C [mm]	D [mm]	E [mm]	F [mm]	G [mm]	Weight
0248127	ESA.EAL.1010.60	Ø10	Ø10	10	60	13	93	12.5	20 g
0243651	ESA.EAL.1212.60	Ø12	Ø12	12	60	15	98	14.5	22 g
0245619	ESA.EAL.1414.40	Ø14	Ø14	14	40	16	82	16.5	32 g
0240966	ESA.EAL.1414.80	Ø14	Ø14	14	80	16	122	16.5	42 g
0240522	ESA.EAL.1414.120	Ø14	Ø14	14	120	16	162	16.5	50 g
0246788	ESA.EAL.2020.50	Ø20	Ø20	20	50	19	104	22.5	70g
0247472	ESA.EAL.2020.100	Ø20	Ø20	20	100	19	154	22.5	90 g
0244119	ESA.EAL.2020.150	Ø20	Ø20	20	150	19	204	22.5	120 g
0247452	ESA.EAL.3030.80	Ø30	Ø30	30	80	27	160	34.8	235 g
0249507	ESA.EAL.3030.140	Ø30	Ø30	30	140	27	220	34.8	300 g
0241554	ESA.EAL.3030.200	Ø30	Ø30	30	200	27	280	34.8	360 g

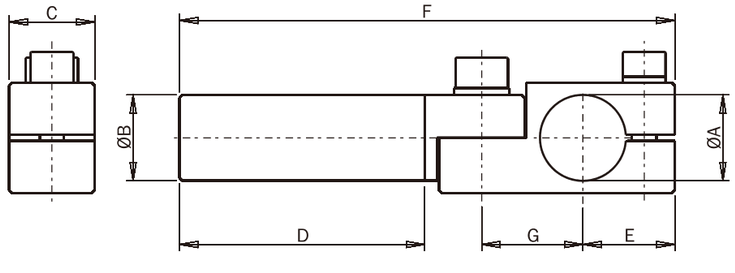



Application example

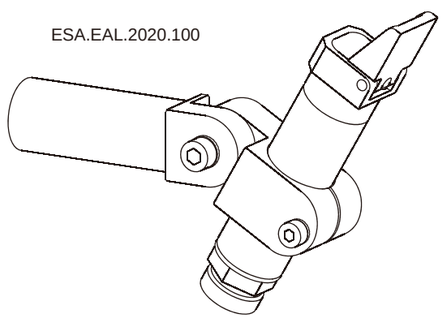

ESA.EAL.2020.100

ESA.FGR.2095.M5

Quick changer
Eoat components
Gripp components
Vacuum components
Fitting
AIR NIPPERS
STATIC SOLUTIONS

Heavy duty elbow arm

(kit with screws)

	Model	ESA.EAH.2020.50	ESA.EAH.2020.100	ESA.EAH.2020.150	ESA.EAH.3030.80	ESA.EAH.3030.140	ESA.EAH.3030.200
	PN	0247658	0241983	0242969	0248257	0242507	0243277
A	[mm]	Ø20	Ø20	Ø20	Ø30	Ø30	Ø30
B	[mm]	Ø20	Ø20	Ø20	Ø30	Ø30	Ø30
C	[mm]	25	25	25	35	35	35
D	[mm]	50	100	150	80	140	200
E	[mm]	19.5	19.5	19.5	27.3	27.3	27.3
F	[mm]	113.5	163.5	213.5	168.5	228.5	288.5
G	[mm]	28.7	28.7	28.7	40.7	40.7	40.7
Weight		95 g	115 g	130 g	330 g	380 g	435 g

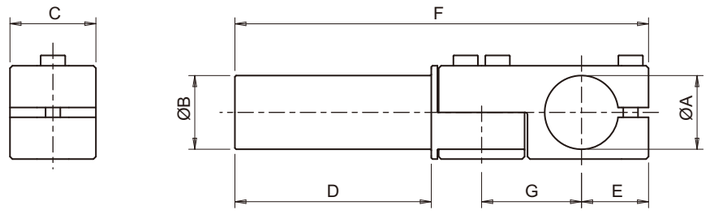



Application example

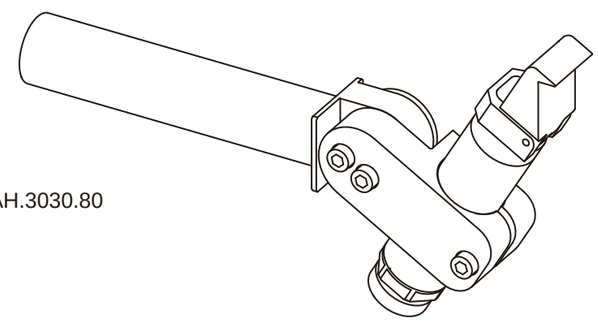

ESA.EAH.3030.80

ESA.FGR.3035.G18

Elbow arm for vacuum cup

(kit with screws)

PN	Model	A [mm]	B [mm]	C [mm]	D [mm]	E [mm]	F [mm]	G [mm]	H [mm]	L [mm]	Weight
0242191	ESA.EAV.M510.45	M5	Ø10	16.5	45	5.5	19	14	22	11	18 g
0243657	ESA.EAV.M510.90	M5	Ø10	16.5	90	5.5	19	14	22	11	27 g
0249010	ESA.EAV.G1814.60	G1/8”	Ø14	22	60	8.5	29	14	22	13.5	33 g
0240567	ESA.EAV.G1814.120	G1/8”	Ø14	22	120	8.5	29	14	22	13.5	50 g
0242422	ESA.EAV.G1820.78	G1/8”	Ø20	22	78	8.5	29	14	22	13.5	60 g
0249157	ESA.EAV.G1820.153	G1/8”	Ø20	22	153	8.5	29	14	22	13.5	100 g
0246430	ESA.EAV.G1420.75	G1/4”	Ø20	27	75	12	38	20	28	15	75 g
0249054	ESA.EAV.G1420.150	G1/4”	Ø20	27	150	12	38	20	28	15	115 g

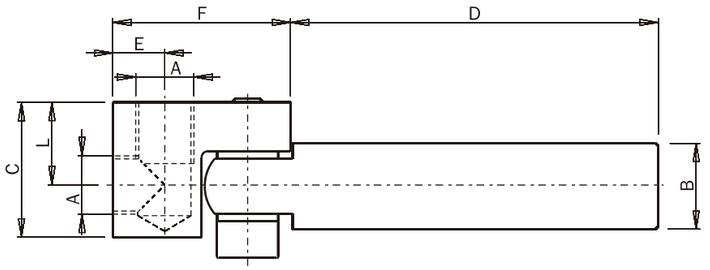



Application example

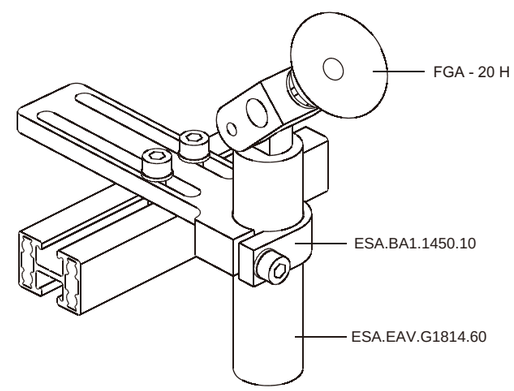

ESA.FEP.2518

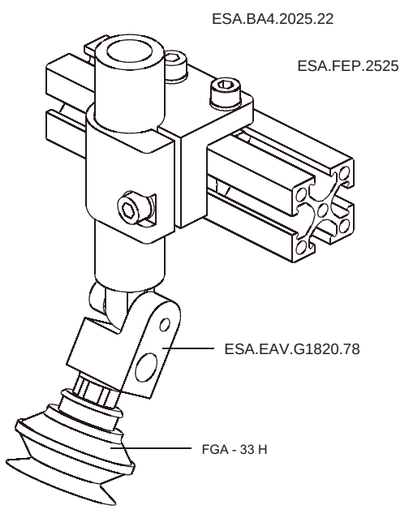

Elbow arm for vacuum cup clamping

(kit with screws)

PN	Model	A [mm]	B [mm]	C [mm]	D [mm]	E [mm]	F [mm]	G [mm]	H [mm]	I [mm]	L [mm]	Weight
0247228	ESA.EVC.M510.30	Ø10	30	17	14.5	11	18	7	48	18.5	M5	14 g
0246439	ESA.EVC.M510.60	Ø10	60	17	14.5	11	18	7	78	18.5	M5	17 g
0241978	ESA.EVC.M510.90	Ø10	90	17	14.5	11	18	7	108	18.5	M5	20 g
0242724	ESA.EVC.G1814.40	Ø14	40	22.5	19.4	14.5	23.5	9.5	63.5	24.5	G1/8"	32 g
0247773	ESA.EVC.G1814.80	Ø14	80	22.5	19.4	14.5	23.5	9.5	103.5	24.5	G1/8"	40 g
0242641	ESA.EVC.G1814.120	Ø14	120	22.5	19.4	14.5	23.5	9.5	143.5	24.5	G1/8"	48 g
0242369	ESA.EVC.G1820.50	Ø20	50	28	23.3	18	30	12	80	33	G1/8"	63 g
0247060	ESA.EVC.G1820.100	Ø20	100	28	23.3	18	30	12	130	33	G1/8"	78 g
0240735	ESA.EVC.G1820.150	Ø20	150	28	23.3	18	30	12	180	33	G1/8"	93 g
0248346	ESA.EVC.G1420.50	Ø20	50	30.5	23.3	18	30	12	80	30	G1/4"	58 g
0243977	ESA.EVC.G1420.100	Ø20	100	30.5	23.3	18	30	12	130	30	G1/4"	73 g
0248567	ESA.EVC.G1420.150	Ø20	150	30.5	23.3	18	30	12	180	30	G1/4"	88 g

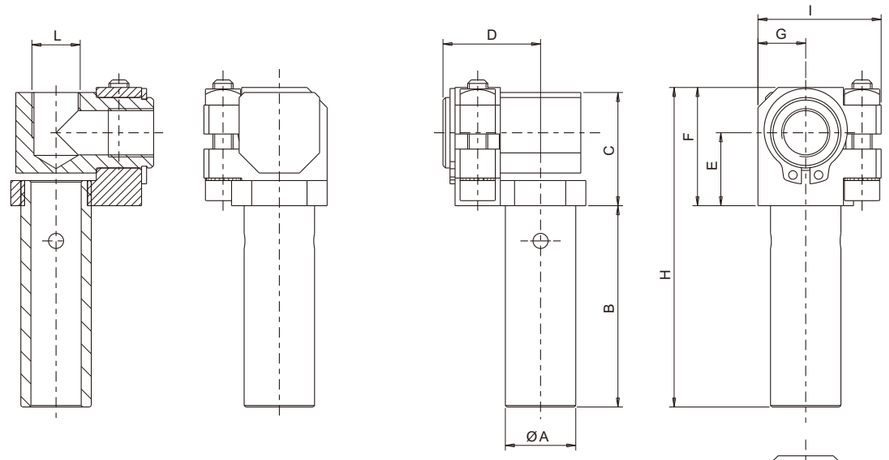

Application example

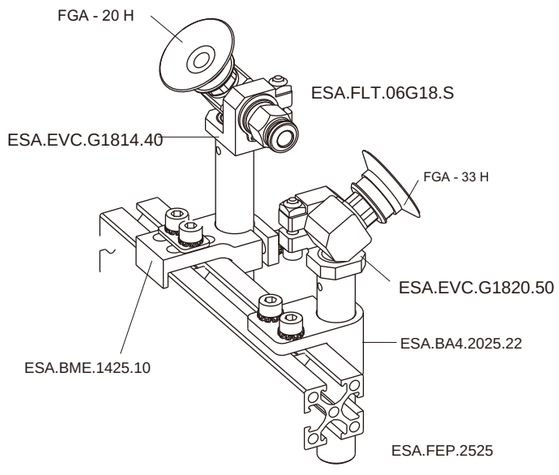

(10)

Hose mounting bracket

(10 pieces package)

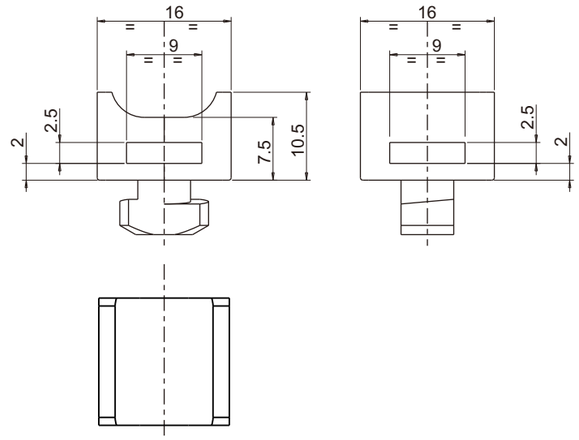

Hose mounting bracket	
PN	0244927
Model	ESA.HMB.1616
20g	Weight 20g



Application example

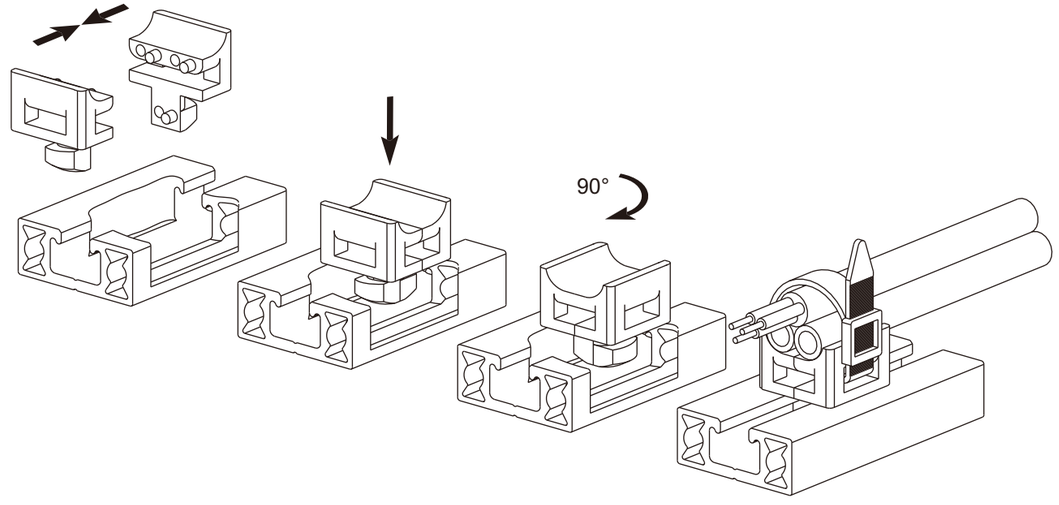

Quick changer
Eoat components
Gripp components
Vacuum components
Fitting
AIR NIPPERS
STATIC SOLUTIONS

Mounting bracket for optical sensors

(kit with screws)

PN	Model	A [mm]	B [mm]	C [mm]	D [mm]	E [mm]	F [mm]	G [mm]	H [mm]	J [mm]	Weight
0244635	ESA.MBS.1440	Ø14	M3	5	40	20.5	37.5	3	25.4	31	32 g
0247885	ESA.MBS.1480	Ø14	M3	5	80	20.5	37.5	3	25.4	31	42 g
0240396	ESA.MBS.14120	Ø14	M3	5	120	20.5	37.5	3	25.4	31	50 g

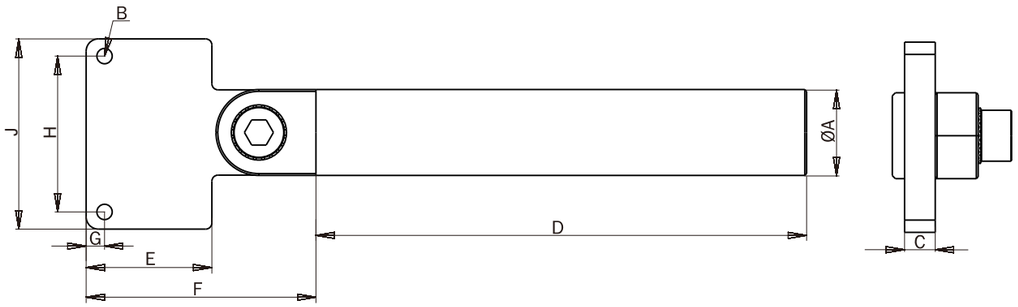

Application example

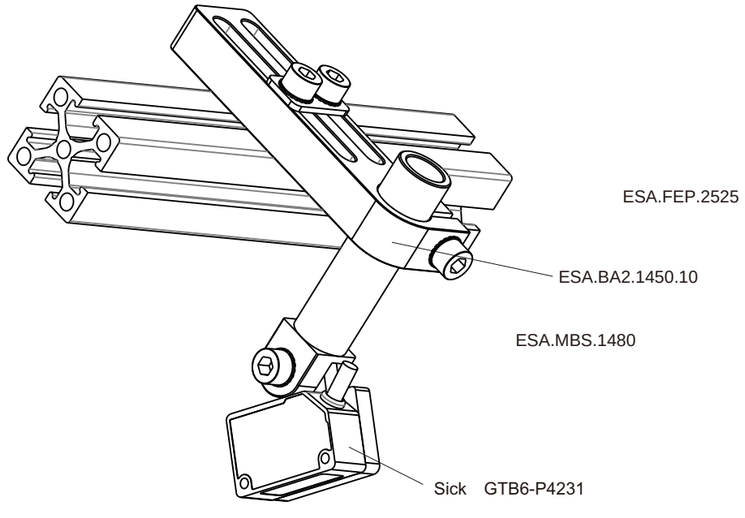

Nipper mounting bracket

(kit with screws)

	Model	ESA.NRB.20	ESA.NRB.30	ESA.NRB.50
	PN	0247817	0242133	0247444
A	[mm]	Ø20	Ø30	Ø30
B	[mm]	Ø45	Ø56	Ø75
C	[mm]	35	40	48
D	[mm]	28	33	41
E	[mm]	94.5	111	138
F	[mm]	53	65	83
G	[mm]	20	25	40
Weight		65 g	110 g	308 g
Compatible with Air Nippers:		GT-NR20	GT-NR30	GT-NR50

	Model	ESA.NSB.20	ESA.NSB.30
	PN	0247434	0244071
A	[mm]	Ø20	Ø20
B	[mm]	Ø45	Ø56
C	[mm]	40	40
D	[mm]	28	33
E	[mm]	94	106
F	[mm]	65	76
G	[mm]	20	20
Weight		65 g	110 g
Compatible with Air Nippers:		GT-NS20	GT-NS30

ESA.NRB

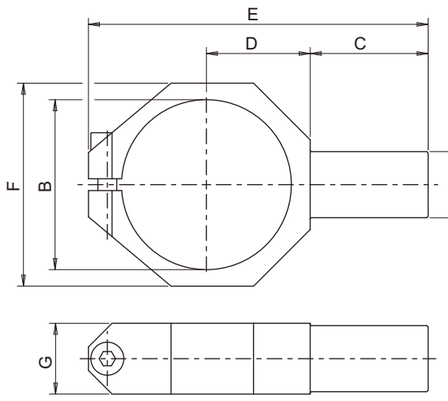

ESA.NSB

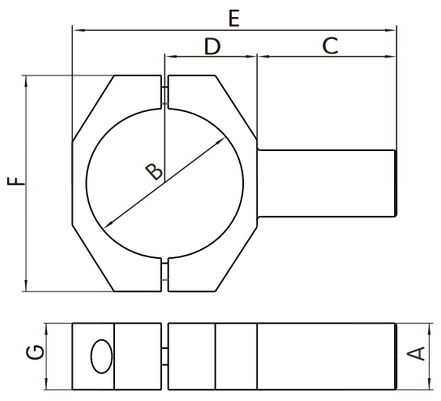



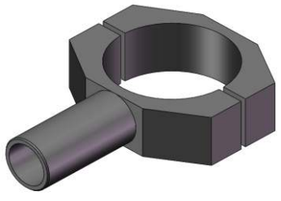

Application example

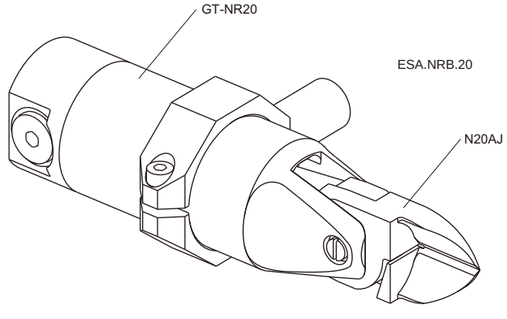

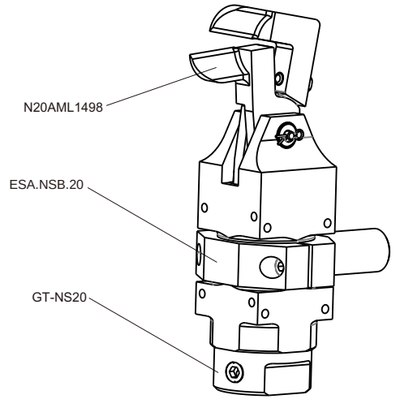

Nipper mounting bracket

(kit with screws)

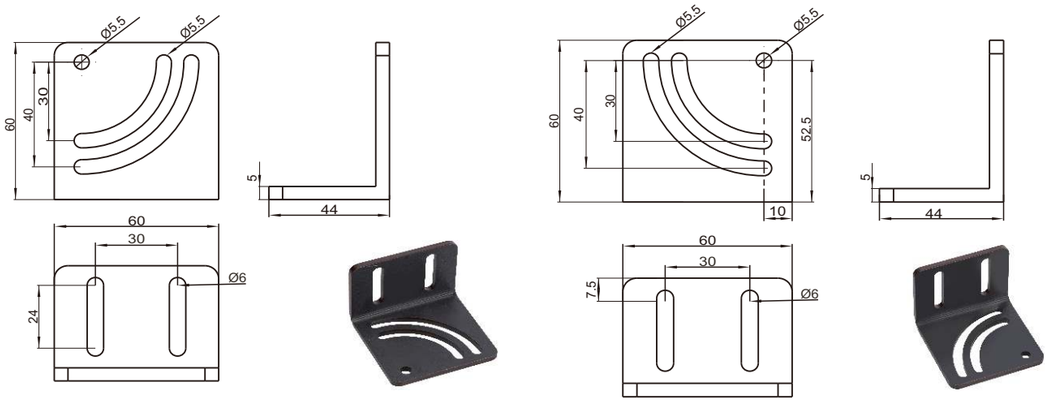

Nipper mounting bracket	
PN	0244794
Model	ESA.NMB.6060.L

● 65.5g ● Weight 65.5g

Nipper mounting bracket	
PN	0247237
Model	ESA.NMB.6060.R

● 65.5g ● Weight 65.5g



Model		ESA.NMB.NR10.S	ESA.NMB.NR20.S	ESA.NMB.NR30.S
PN		0248471	0248453	0249333
A	[mm]	Ø36	Ø45	Ø56
B	[mm]	25	30	35
C	[mm]	65	75	85
D	[mm]	10	10	10
E	[mm]	30	40	40
F	[mm]	15	15	15
Weight		72 g	93 g	111 g
Compatible with Air Nippers:		GT-NR10	GT-NR20	GT-NR30

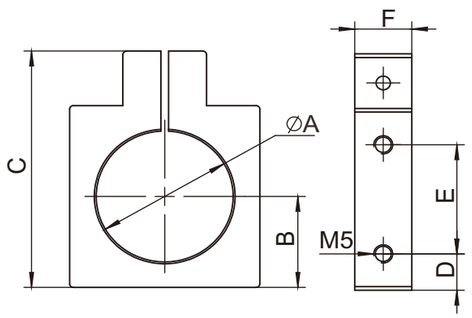

Application example



ESA.NMB.6060.R

ESA.NMB.NR20.S

GT-NR20

N20AMR1499

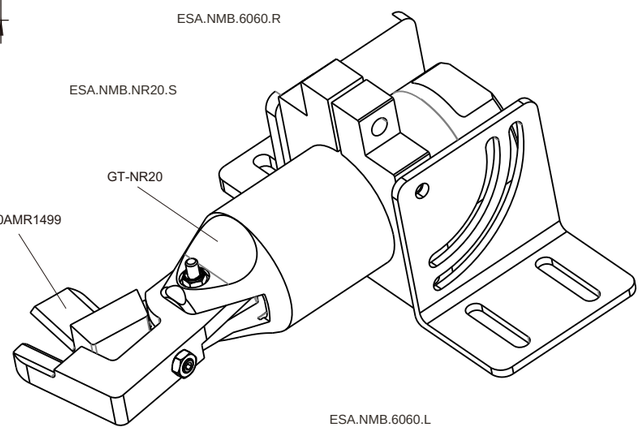

ESA.NMB.6060.L

Nipper mounting bracket

(kit with screws)



	Model	ESA.NYB.05	ESA.NYB.1015	ESA.NYB.25
	PN	0248592	0241988	0247663
A	[mm]	Ø12	-	Ø20
B	[mm]	Ø4.2	-	Ø5.2
C	[mm]	Ø7.2	-	10
D	[mm]	4.2	-	6
E	[mm]	7	-	8
F	[mm]	22	-	28
G	[mm]	25	-	40
H	[mm]	33	-	54
J	[mm]	15	-	30
K	[mm]	23	-	42
Weight		17 g	20g	61 g
Compatible with Air Nippers:		GT-NY05	GT-NY10/GT-NY15	GT-NY25

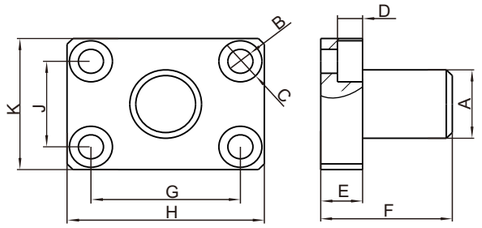

ESA.NYB.1015

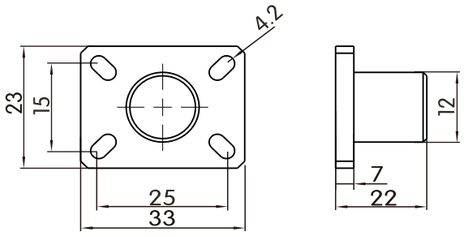

Application example

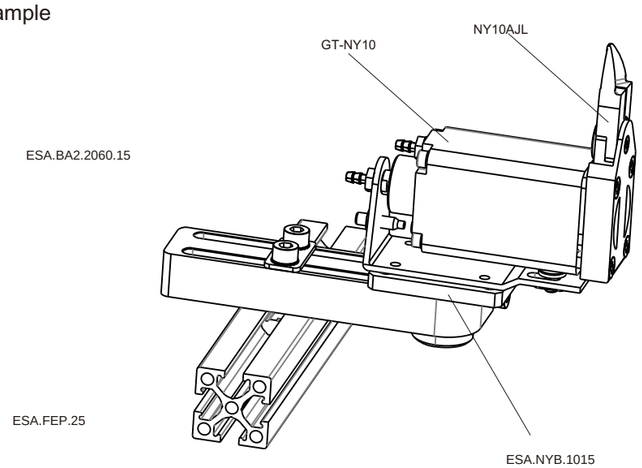

Extension tube

(in aluminum)

PN	Model	A [mm]	B [mm]	C [mm]	D [mm]	E [mm]	F [mm]	L [mm]	Weight
0247960	ESA.ETB.1060	15	8	Ø3.5	Ø7	Ø10	M8x1	60	7 g
0244337	ESA.ETB.1250	25	12	Ø5	Ø10	Ø12	M10x1	50	9 g
0244874	ESA.ETB.12100	50	12	Ø5	Ø10	Ø12	M10x1	100	17g
0243635	ESA.ETB.1450	25	12	Ø5	Ø11	Ø14	M12x1	50	10g
0248109	ESA.ETB.14100	50	12	Ø5	Ø11	Ø14	M12x1	100	20g
0246795	ESA.ETB.2050	25	15	Ø8	Ø16	Ø20	M17x1	50	16g
0241293	ESA.ETB.20100	50	15	Ø8	Ø16	Ø20	M17x1	100	31 g
0245506	ESA.ETB.20150	75	15	Ø8	Ø16	Ø20	M17x1	150	47 g
0241621	ESA.ETB.3050	25	18	Ø9	Ø25	Ø30	M27x1	50	29 g
0241389	ESA.ETB.30100	50	18	Ø9	Ø25	Ø30	M27x1	100	58 g
0244622	ESA.ETB.30150	75	18	Ø9	Ø25	Ø30	M27x1	150	87 g



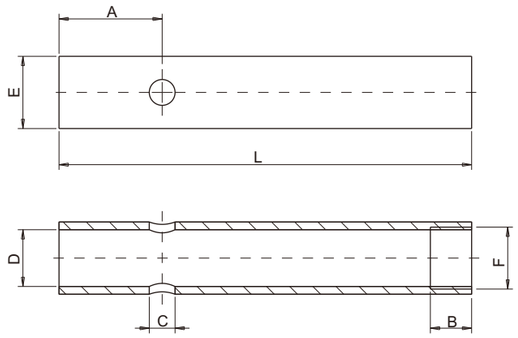

Application example

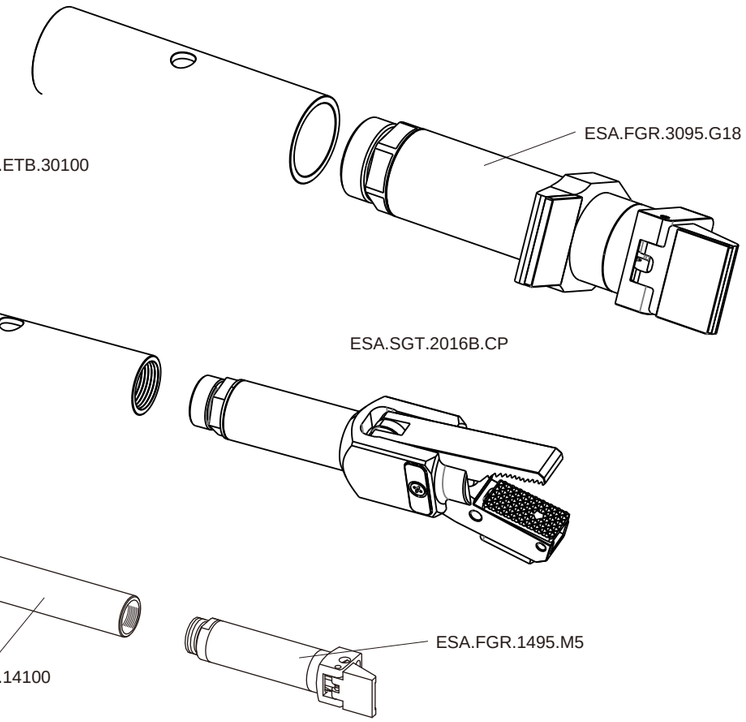

Parallel gripper bracket

PN	Model	A [mm]	B [mm]	C [mm]	D [mm]	E [mm]	F [mm]	G [mm]	H [mm]	I [mm]	J [mm]	Weight
0246682	ESA.PGB.10	3.2	6	2	23	16.4	12	18	14	4	M10x1	5 g
0247097	ESA.PGB.16	4.2	7	3	30.6	23.6	15	22	15	5	M12x1	10 g
0240440	ESA.PGB.20	5.5	7	4	42	27.6	18	32	15	5	M12x1	14g
0243528	ESA.PGB.25	6.5	11	5	52	33.6	22	40	18	6	M17x1	27g
0244294	ESA.PGB.32	6.5	11	5	60	40	26	46	18	6	M17x1	36g
0243776	ESA.PGB.40	8.5	20	5	72	48	32	56	20	8	M27x1	67g



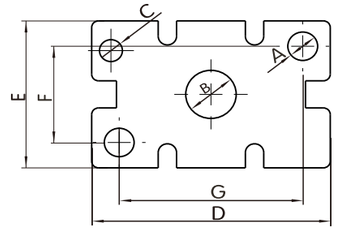

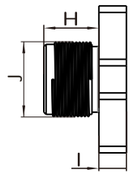

Application example

ESA.BA1.1450.10

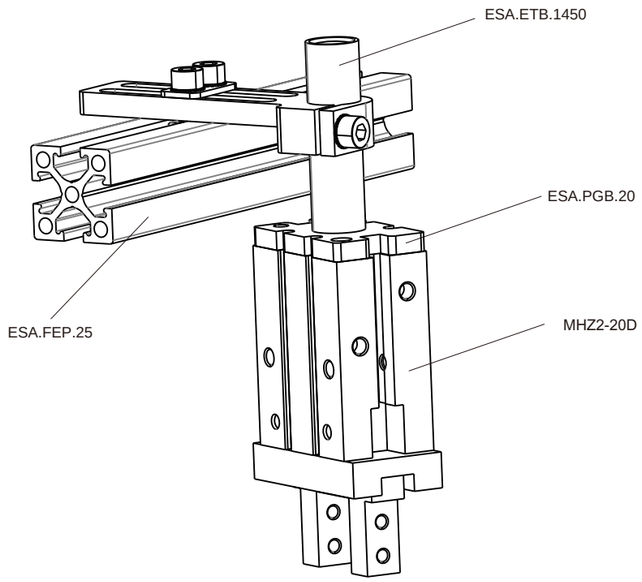

Cross Connector

(in aluminum)

PN	Model	A [mm]	B [mm]	C [mm]	D [mm]	E [mm]	Weight
0244362	ESA.BCC.0808			12	12	35	9.0g
0242388	ESA.BCC.0812			16	12	43	16.8g
0248333	ESA.BCC.1212			16	16	47	20.5g
0242308	ESA.BCC.1220			25	25	59	72g
0249324	ESA.BCC.2020			25	25	64	50.3g
0248324	ESA.BCC.2025			29	24	69	79g
0240556	ESA.BCC.2525			30	30	78	50.3g



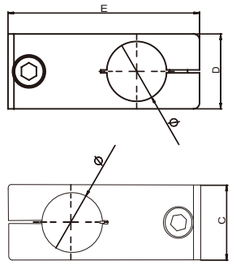

PN	Model	A [mm]	B [mm]	C [mm]	D [mm]	E [mm]	Weight
0248044	ESA.BCC.2030	Ø20	Ø30	36	25	85	168g
0247402	ESA.BCC.2040	Ø20	Ø40	46	25	95	212g
0240734	ESA.BCC.2530	Ø25	Ø30	36	31	87	175g
0245895	ESA.BCC.2540	Ø25	Ø40	46	31	100	203g
0246812	ESA.BCC.3030	Ø30	Ø30	36	36	92	187g
0249235	ESA.BCC.4040	Ø40	Ø40	46	46	114	260g



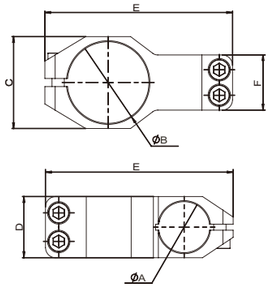

T Connector

PN	Model	A [mm]	B [mm]	C [mm]	D [mm]	E [mm]	F [mm]	G [mm]	Weight
0243323	ESA.BTC.0808.A	Ø8	Ø8	12	20	30	M4	14	14g
0246565	ESA.BTC.0812.A	Ø8	Ø12	16	20	30	M4	14	23g
0243200	ESA.BTC.1208.A	Ø12	Ø8	16	26	30	M4	16	19g
0249185	ESA.BTC.1212.A	Ø12	Ø12	16	26	30	M4	16	18g
0248632	ESA.BTC.1220.A	Ø12	Ø20	25	30	45	M4	20	60g
0247462	ESA.BTC.2012.A	Ø20	Ø12	25	40	45	M4	25	63g
0241337	ESA.BTC.2020.A	Ø20	Ø20	25	40	45	M4	25	56g

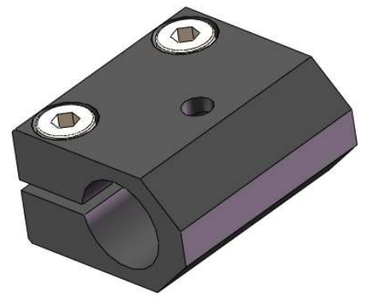

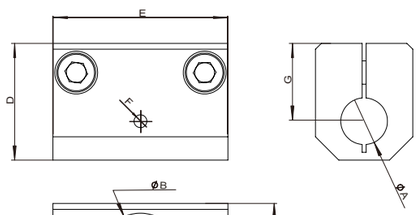

PN	Model	A [mm]	B [mm]	C [mm]	D [mm]	E [mm]	F [mm]	G [mm]	Weight
0242990	ESA.BTC.0808.B	Ø8	Ø8	12	28	26	M4	22	15g
0245072	ESA.BTC.0812.B	Ø8	Ø12	16	28	30	M4	22	31g
0247078	ESA.BTC.1208.B	Ø12	Ø8	16	35	30	M4	25	29g
0248174	ESA.BTC.1212.B	Ø12	Ø12	16	35	30	M4	25	26g
0247920	ESA.BTC.1220.B	Ø12	Ø20	25	44	45	M4	34	88g
0246456	ESA.BTC.2012.B	Ø20	Ø12	25	54	45	M4	39	111g
0246904	ESA.BTC.2020.B	Ø20	Ø20	25	51.5	45	M4	39	78g

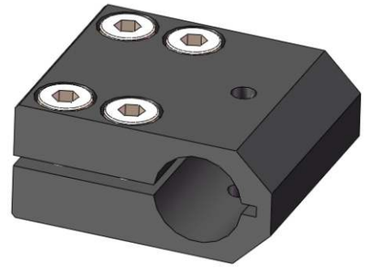

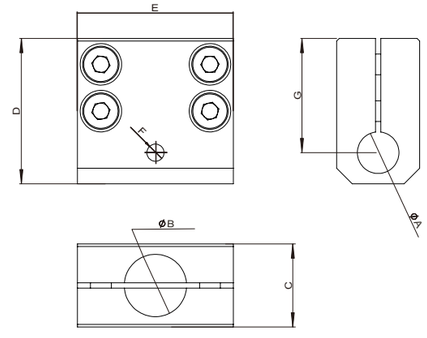

T Connector

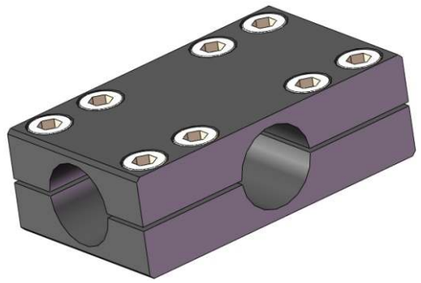

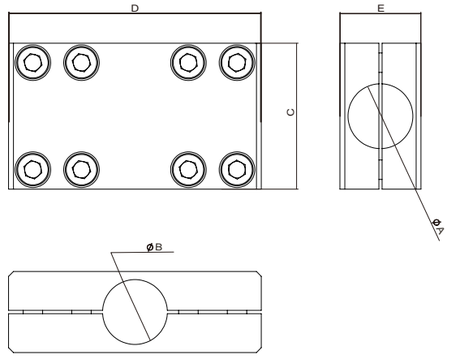

PN	Model	A [mm]	B [mm]	C [mm]	D [mm]	E [mm]	Weight
0249267	ESA.BTC.2020.C	Ø20	Ø20	25	78	45	170g

Application example

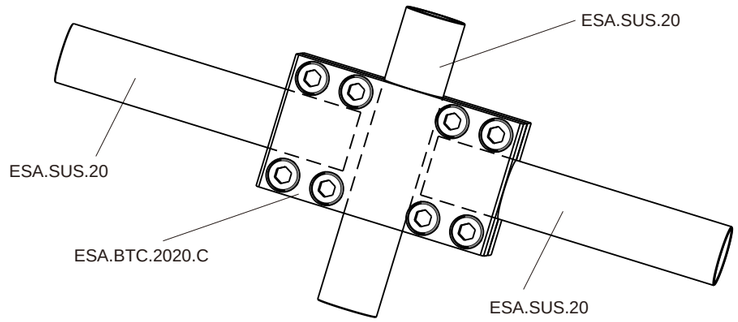

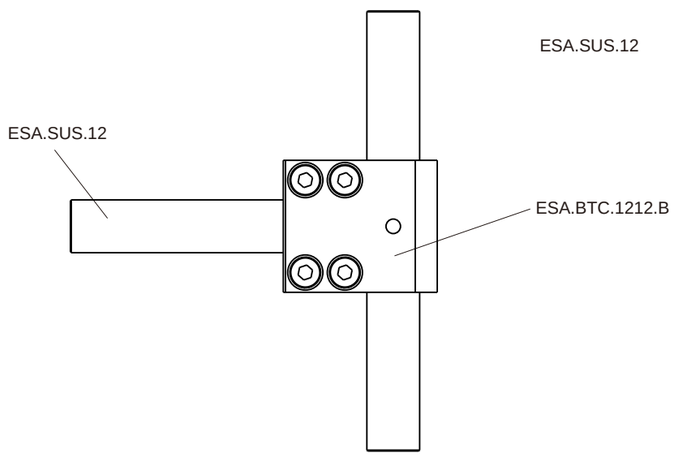

Parallel Connector

PN	Model	A [mm]	B [mm]	C [mm]	D [mm]	E [mm]	F [mm]	Weight
0245436	ESA.BPC.0808	Ø8	Ø8	12	12	35	10	11g
0244026	ESA.BPC.0812	Ø8	Ø12	16	16	43	12	23g
0246333	ESA.BPC.1212	Ø12	Ø12	16	16	44	14	21g
0247054	ESA.BPC.2012	Ø20	Ø12	25	25	60	18	75g
0246345	ESA.BPC.2020	Ø20	Ø20	25	25	66	24	71g



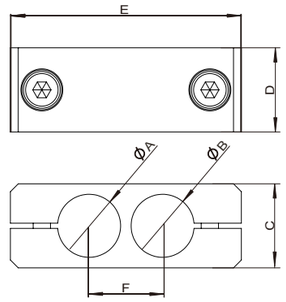

Bracket

PN	Model	A [mm]	B [mm]	C [mm]	D [mm]	E [mm]	F [mm]	Weight
0240990	ESA.BRA.0810	Ø8	10	16	Ø5.5	30	20	20g
0248874	ESA.BRA.1210	Ø12	10	16	Ø5.5	30	20	14g
0241641	ESA.BRA.2010	Ø20	10	27	Ø6.5	40	30	36g
0248455	ESA.BRA.0816	Ø8	16	16	Ø6.5	30	20	32g
0249546	ESA.BRA.1216	Ø12	16	16	Ø4.5	30	20	20g
0241050	ESA.BRA.2016	Ø20	16	27	Ø6.5	40	30	48g

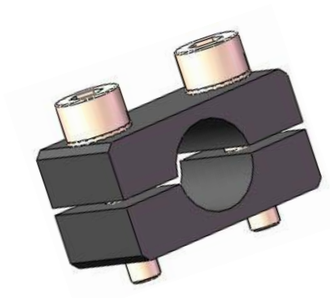

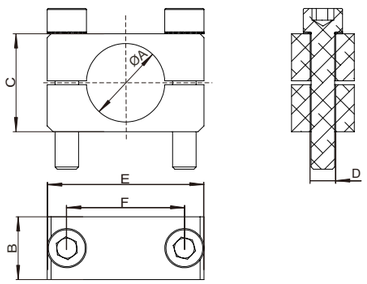

Bracket (access robot)

PN	Model	A [mm]	B [mm]	C [mm]	D [mm]	E [mm]	Weight
0244081	ESA.BAR.08M5	Ø8	14	35	12	Ø5.5	15g
0246732	ESA.BAR.8M6	Ø8	14	35	12	Ø6.5	12g
0240421	ESA.BAR.12M5	Ø12	20	39	16	Ø5.5	30g
0243808	ESA.BAR.12M6	Ø12	20	39	16	Ø6.5	25g
0242156	ESA.BAR.12M8	Ø12	20	45	25	Ø9	42g
0245957	ESA.BAR.20M6	Ø20	20	50	25	Ø6.5	48g
0244897	ESA.BAR.20M8	Ø20	20	50	25	Ø9	51g

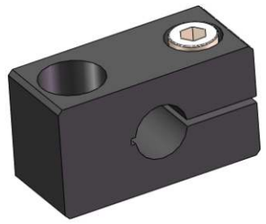

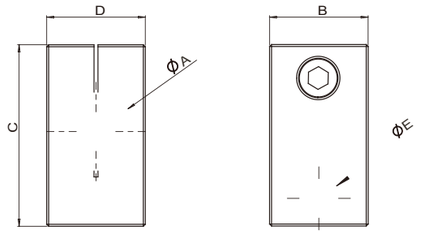

Slide Bracket

PN	Model	A [mm]	B [mm]	C [mm]	D [mm]	E [mm]	F [mm]	Weight
0246427	ESA.SDB.0810	Ø8	10	16	30	M4	20	16g
0248657	ESA.SDB.1210	Ø12	10	16	30	M4	20	15g
0245881	ESA.SDB.2010	Ø20	10	25	40	M6	30	33g
0249344	ESA.SDB.0816	Ø8	16	16	30	M6	20	29g
0242921	ESA.SDB.1216	Ø12	16	16	30	M6	20	29g
0242165	ESA.SDB.2016	Ø20	16	25	40	M6	30	44g

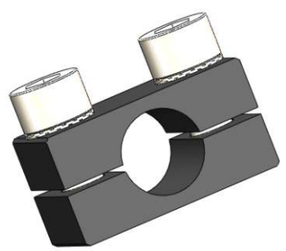

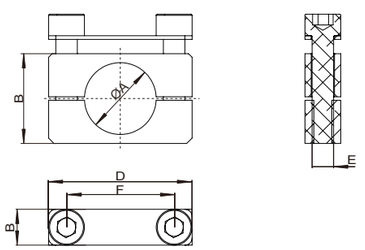

Slide Bracket

PN	Model	A [mm]	B [mm]	C [mm]	D [mm]	E [mm]	F [mm]	Weight
0248884	ESA.SDB.40M10	M10*1	40	16	6.5	5	70	10g
0242252	ESA.SDB.40M12	M12 *1	40	16	6.5	5	72	10g
0240947	ESA.SDB.40M17	M17 *1	40	25	6.5	5	80	20g
0240336	ESA.SDB.70M10	M10 *1	70	16	6.5	5	100	14g
0240127	ESA.SDB.70M12	M12 *1	70	16	6.5	5	102	14g
0243761	ESA.SDB.70M17	M17 *1	70	25	6.5	5	110	28g

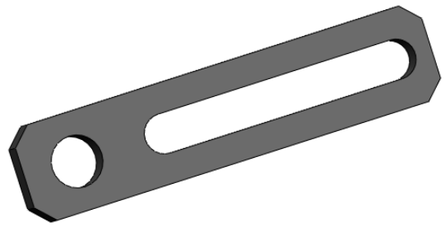

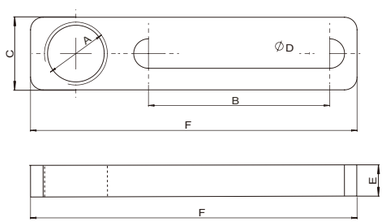

PN	Model	A [mm]	B [mm]	C [mm]	D [mm]	E [mm]	F [mm]	G [mm]	H [mm]	I [mm]	Weight
0243211	ESA.SDB.V0840.12	4.5	Ø8	12	40	14	16	70	6	20	14g
0245676	ESA.SDB.V0840.16	6.5	Ø8	16	40	14	16	70	6	20	20g
0240210	ESA.SDB.V1240.16	6.5	Ø12	16	40	16	16	75	6	25	21g
0247692	ESA.SDB.V2040.25	6.5	Ø20	25	40	20	16	86	6	34	39g
0241373	ESA.SDB.V0870.12	4.5	Ø8	12	70	14	16	100	6	20	18g
0243830	ESA.SDB.V0870.16	6.5	Ø8	16	70	14	16	100	6	20	25g
0240332	ESA.SDB.V1270.16	6.5	Ø12	16	70	16	16	105	6	25	25g
0246079	ESA.SDB.V2070.25	6.5	Ø20	25	70	20	16	116	6	34	49g



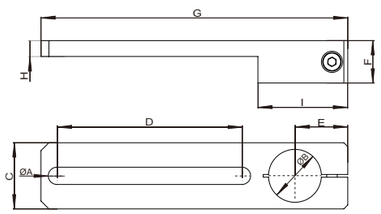

Slide Bracket

PN	Model	A [mm]	B [mm]	C [mm]	D [mm]	E [mm]	F [mm]	G [mm]	H [mm]	I [mm]	Weight
0242455	ESA.SDB.C0840.16	6.5	Ø8	16	40	20	16	14	70	6	20g
0244355	ESA.SDB.C0840.12	4.5	Ø8	12	40	20	16	14	70	6	15g
0249941	ESA.SDB.C1240.16	6.5	Ø12	16	40	25	16	16	75	6	20g
0246200	ESA.SDB.C2040.25	6.5	Ø20	25	40	34	25	20	86	6	53g
0247747	ESA.SDB.C0870.12	6.5	Ø8	16	70	20	16	14	100	6	25g
0244008	ESA.SDB.C0870.16	4.5	Ø8	12	70	20	16	14	100	6	19g
0246894	ESA.SDB.C1270.16	6.5	Ø12	16	70	25	16	16	105	6	25g
0240116	ESA.SDB.C2070.25	6.5	Ø20	25	70	34	25	20	116	6	48g

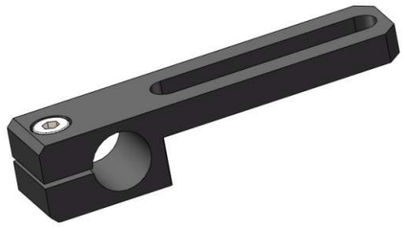

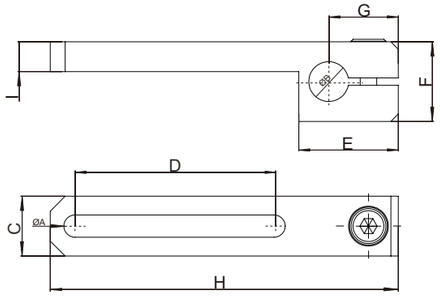

Application example



Rotation Bracket

PN	Model	A [mm]	B [mm]	C [mm]	D [mm]	E [mm]	F [mm]	G [mm]	H [mm]	Weight
0244213	ESA.XZB.M4M10	M4	M10	14	14	26.5	11.5	Ø8	19	6g
0242522	ESA.XZB.M4M12	M4	M12	16	16	33.5	13.5	Ø12	23.5	12g



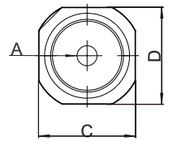

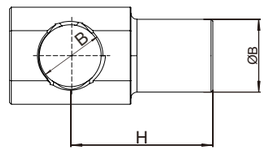

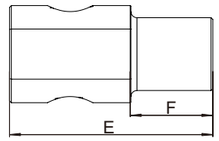

PN	Model	A [mm]	B [mm]	C [mm]	D [mm]	E [mm]	F [mm]	G [mm]	H [mm]	Weight
0240112	ESA.XZB.0808.M4	M4	Ø8	Ø8	12	32.5	11.5	12	17.5	7g
0246669	ESA.XZB.1208.M4	M4	Ø12	Ø8	16	37.5	11.5	16	21.5	13g
0248397	ESA.XZB.1212.M4	M4	Ø12	Ø12	16	39.5	13.5	16	23.5	15g
0240893	ESA.XZB.1212.M4L	M4	Ø12	Ø12	16	55	29	16	39	20g
0244738	ESA.XZB.1420.M6	M6	Ø14	Ø20	25	60	20	25	37	70g
0246075	ESA.XZB.2020.M6	M6	Ø20	Ø20	25	60	20	25	37	59g
0242827	ESA.XZB.2020.M6L	M6	Ø20	Ø20	25	85	45	25	62	81g



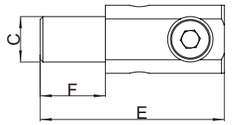

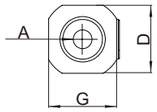

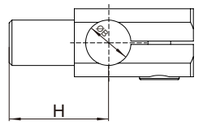

PN	Model	A [mm]	B [mm]	C [mm]	D [mm]	E [mm]	F [mm]	G [mm]	Weight
0249790	ESA.XZB.1208.L	Ø12	Ø8	29	14	38	22.5	13.5	24g
0246896	ESA.XZB.0808.L	Ø8	Ø8	29	11.5	36	20	13	16g
0244668	ESA.XZB.1212.L	Ø12	Ø12	29	14	38	22.5	13.5	18g

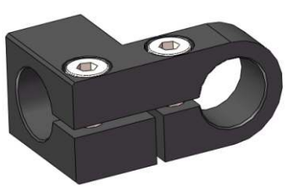

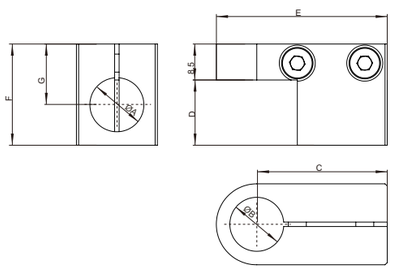

Rotation Bracket

PN	Model	A [mm]	B [mm]	C [mm]	D [mm]	E [mm]	F [mm]	G [mm]	H [mm]	I [mm]	J [mm]	Weight
0248322	ESA.XZB.0808.T	Ø8	Ø8	16	15	15	25	10	15	21	32.5	13g
0245600	ESA.XZB.0808.T	Ø12	Ø12	20	18	18	29	11	18	23	38	18g

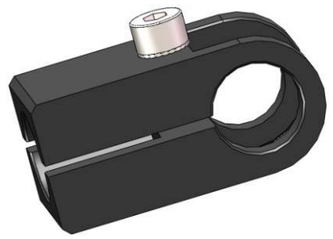

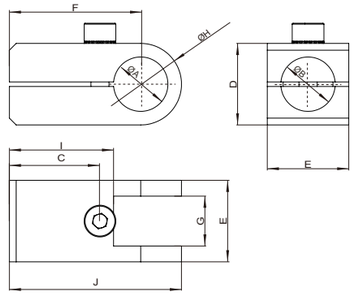

Bracket

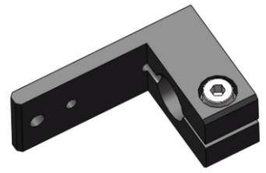

Bracket

PN	0248417
Model	ESA.BRK.2038.L12

● 23g ● Weight 23g

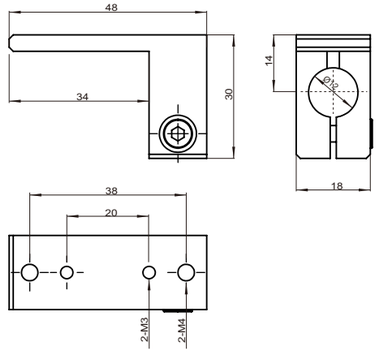



Bracket

PN	0247889
Model	ESA.BRK.2038.T12

● 21g ● Weight 21g

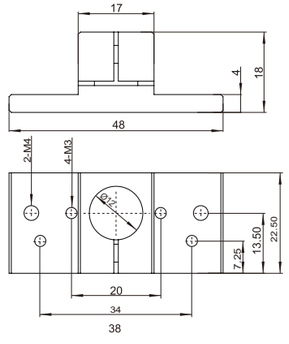

Bracket

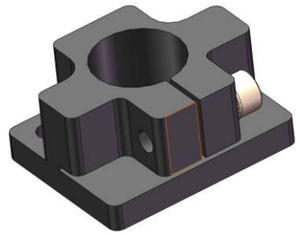

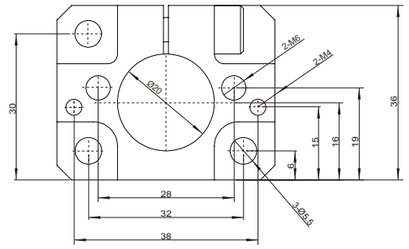

Bracket

PN	0240075
Model	ESA.BRK.2838.T20

● 49g ● Weight 49g

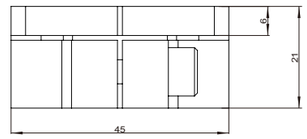

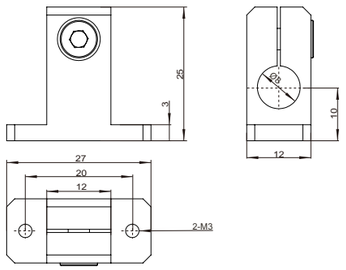

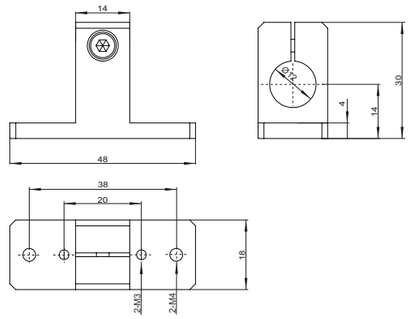

Bracket

PN	0248586
Model	ESA.BRK.0020.C08

● 10g ● Weight 10g

Bracket

PN	0247225
Model	ESA.BRK.2038.C12

● 22g ● Weight 22g

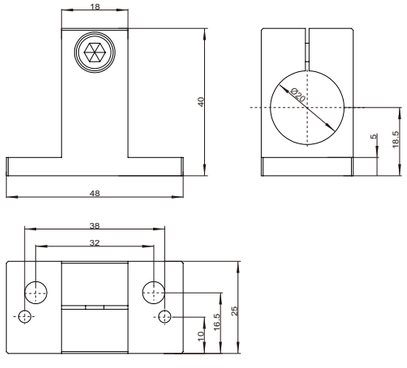

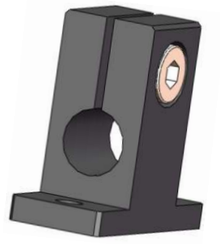

Bracket

PN	0240667
Model	ESA.BRK.0038.C20

● 22g ● Weight 22g

Bracket

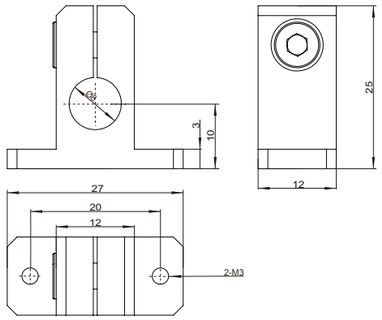

Bracket	
PN	0246637
Model	ESA.BRK.0020.Z08

● 10g ● Weight 10g

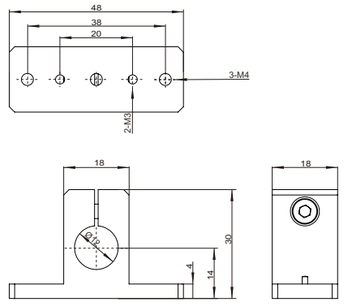

Bracket	
PN	0246717
Model	ESA.BRK.2038.Z12

● 26g ● Weight 26g

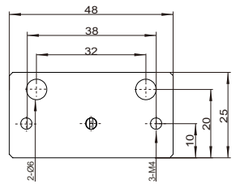

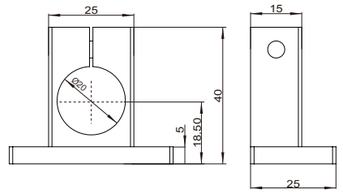

Bracket	
PN	0241888
Model	ESA.BRK.3238.Z20

● 39g ● Weight 39g



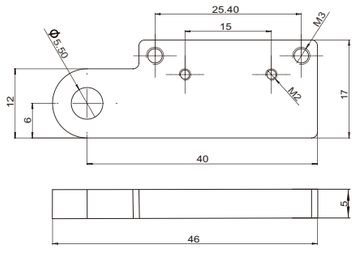

Bracket	
PN	0249096
Model	ESA.BRK.3225.25

● 12g ● Weight 12g

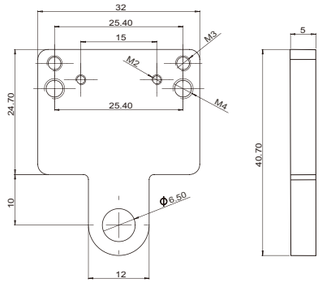

Bracket	
PN	0242013
Model	ESA.BRK.1525.17

● 9g ● Weight 9g



Sprue Gripper



ESA.SGA.1006B ESA.SGA.1008B ESA.SGA.1008C ESA.SGA.1012A ESA.SGA.1012B ESA.SGA.1012C ESA.SGA.1012D ESA.SGA.1012E



ESA.SGA.1012F



ESA.SGA.1012A.CN
ESA.SGA.1012A.CP



ESA.SGA.1012B.CN
ESA.SGA.1012B.CP



ESA.SGA.1012C.CN
ESA.SGA.1012B.CP

Model									
Medium	Filtered&Compressed Air								
Pressure range	2.5~8bar								
Temperature range	5°~60°								
Strock	2x10°	2x10°	2x10°	2x16°	2x16°	2x16°	2x16°	2x16°	2x16°
Max working Frequency	3HZ								
Cycle Air Consumption	0.3cm³	0.3cm³	0.3cm³	1.2cm³	1.2cm³	1.2cm³	1.2cm³	1.2cm³	1.2cm³
Closing time without load	0.01s								
Closing gripping torque	10N/cm	24N/cm	24N/cm	80N/cm	80N/cm	80N/cm	80N/cm	80N/cm	80N/cm
Opening gripping torque	1N/cm	2N/cm	2N/cm	5N/cm	5N/cm	5N/cm	5N/cm	5N/cm	5N/cm
Air Inlet	M5								
Weight	7g	15g	15g	52g/58g/58g	50g/57g/57g	46g/55g/55g	75g	55g	46g

Sprue Gripper



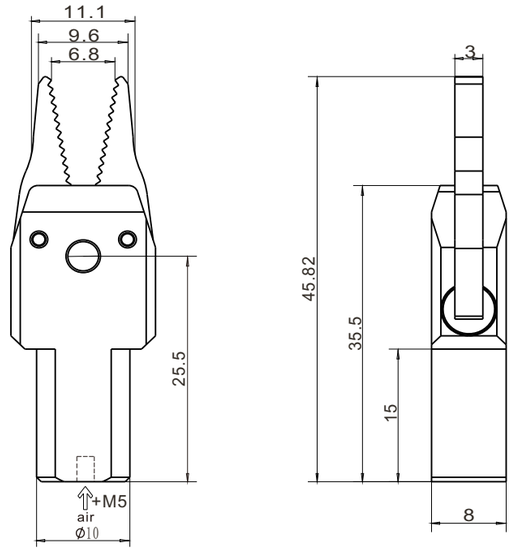

Sprue Gripper

PN	0249720
Model	ESA.SGA.1006B

- 7g
- 6mm
- 10N
- Weight 7g
- Piston bore 6mm
- Aluminum jaws
- Single acting
- Grip:10N



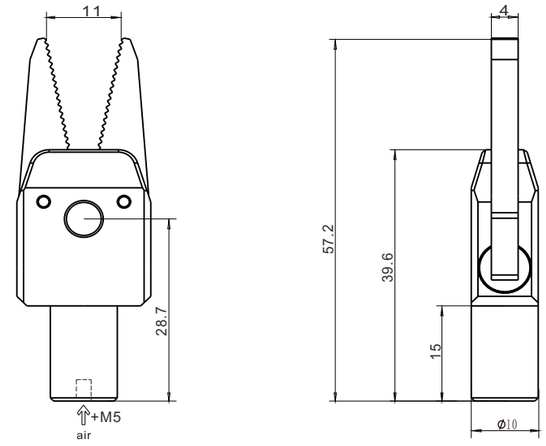

Sprue Gripper

PN	0243544
Model	ESA.SGA.1008B

- 15g
- 8mm
- 24N
- Weight 15g
- Piston bore 8mm
- Aluminum jaws
- Single acting
- Grip:24N



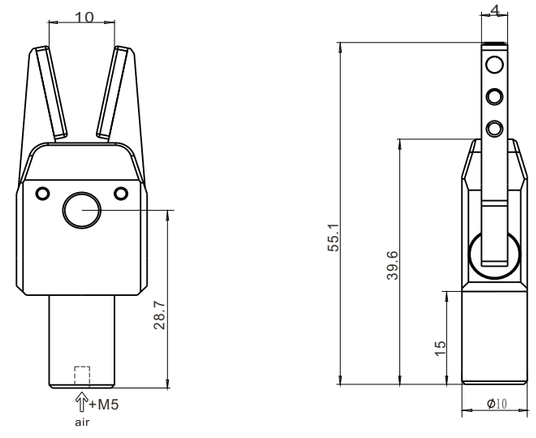

Sprue Gripper

PN	0240243
Model	ESA.SGA.1008C

- 15g
- 8mm
- 24N
- Weight 15g
- Piston bore 8mm
- Aluminum jaws
- Single acting
- Grip:24N
- Silicone pads

Sprue Gripper



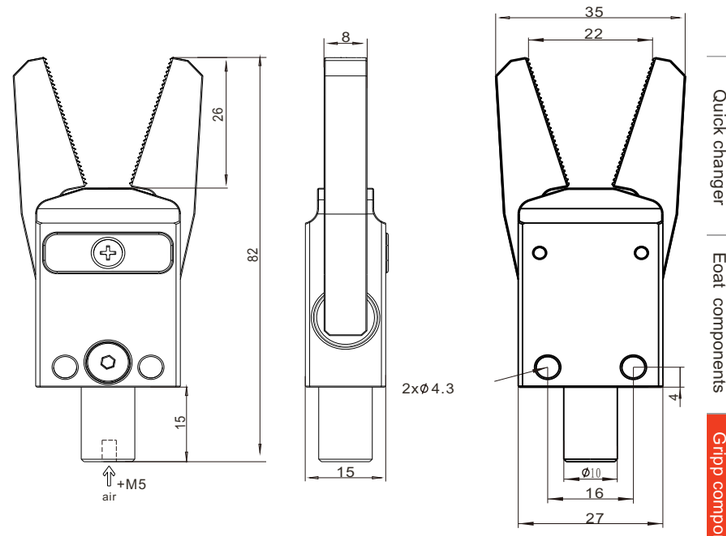

Sprue Gripper

PN	0245160
Model	ESA.SGA.1012A

- 52g
- 12mm
- 80N
- Weight 52g
- Piston bore 12mm
- Aluminum jaws
- Single acting
- Grip:80N



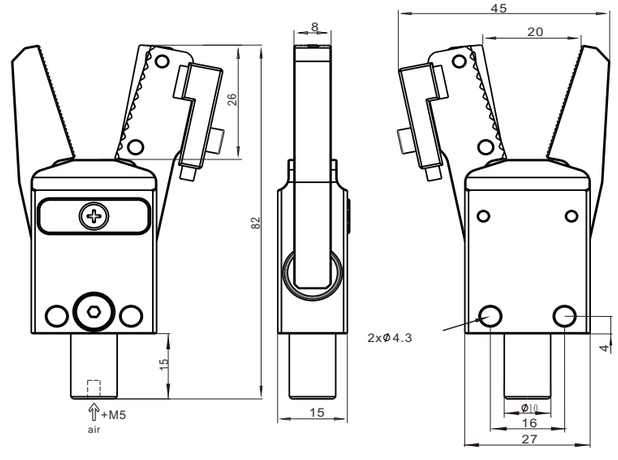

Sprue Gripper

PN	0240417
Model	ESA.SGA.1012A.CN

- 58g
- 12mm
- 80N
- 3 NPN
- GX-F8A
- 1000mm
- Weight 58g
- Piston bore 12mm
- Aluminum jaws
- Single acting
- Grip:80N
- Sensor direct current three-wire system NPN
- Sensor Model GX-F8A
- Harness length 1000mm

Sprue Gripper

PN	0247347
Model	ESA.SGA.1012A.CP

- 58g
- 12mm
- 80N
- 3 PNP
- GX-F8A-P
- 1000mm
- Weight 58g
- Piston bore 12mm
- Aluminum jaws
- Single acting
- Grip:80N
- Sensor direct current three-wire system PNP
- Sensor Model GX-F8A-P
- Harness length 1000mm

Sprue Gripper



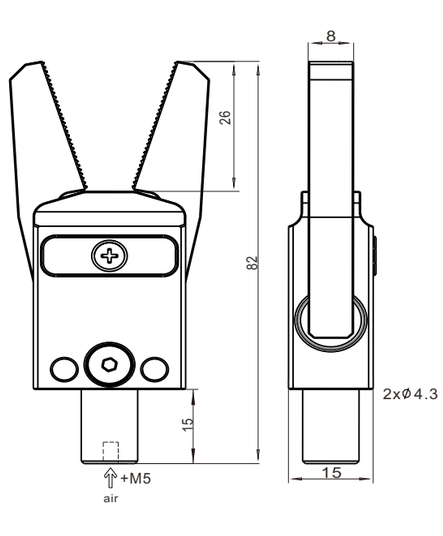

Sprue Gripper

PN	0242881
Model	ESA.SGA.1012B

- 50g
- 12mm
- 80N
- Weight 50g
- Piston bore 12mm
- Aluminum jaws
- Single acting
- Grip:80N



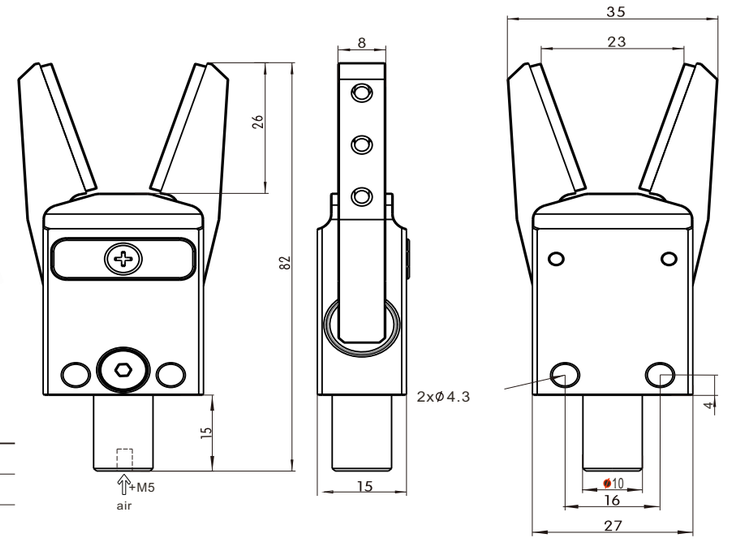

Sprue Gripper

PN	0242833
Model	ESA.SGA.1012C

- 46g
- 12mm
- 80N
- Weight 46g
- Piston bore 12mm
- Aluminum jaws
- Single acting
- Grip:80N
- Silicone pads



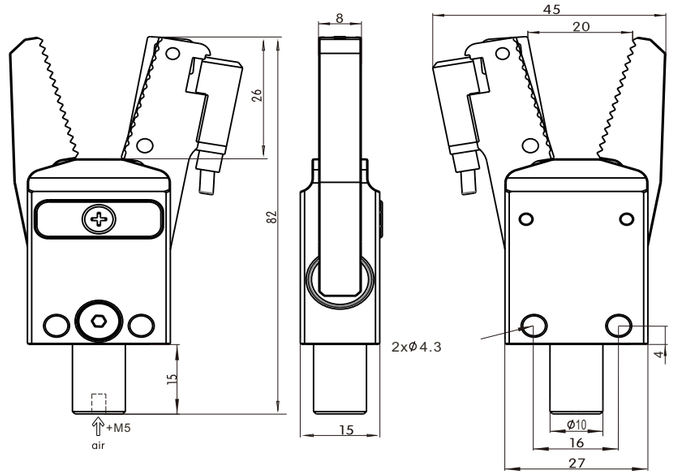

Sprue Gripper

PN	0241614
Model	ESA.SGA.1012B.CN

- 57g
- 12mm
- 80N
- 3 NPN
- GX-F8A
- 1000mm
- Weight 57g
- Piston bore 12mm
- Aluminum jaws
- Single acting
- Grip:80N
- Sensor direct current three-wire system NPN
- Sensor Model GX-F8A
- Harness length 1000mm

Sprue Gripper

PN	0242560
Model	ESA.SGA.1012B.CP

- 57g
- 12mm
- 80N
- 3 PNP
- GX-F8A-P
- 1000mm
- Weight 57g
- Piston bore 12mm
- Aluminum jaws
- Single acting
- Grip:80N
- Sensor direct current three-wire system PNP
- Sensor Model GX-F8A-P
- Harness length 1000mm



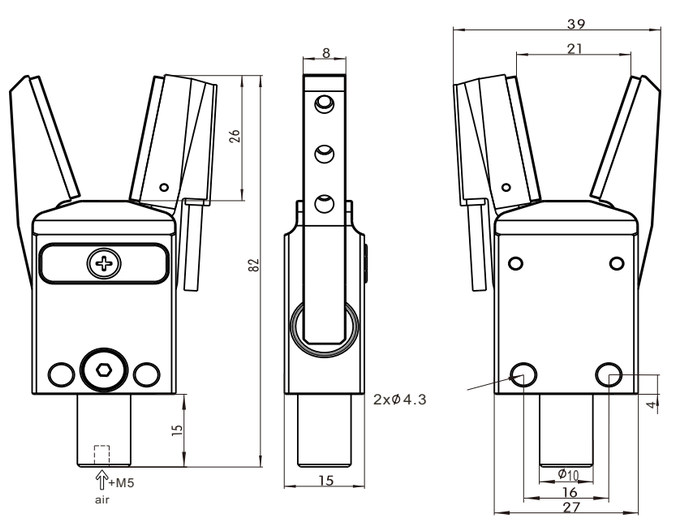

Sprue Gripper

PN	0244421
Model	ESA.SGA.1012C.CN

- 55g
- 12mm
- 80N
- 3 NPN
- D-M9N
- 3000mm
- Weight 55g
- Piston bore 12mm
- Aluminum jaws
- Single acting
- Grip:80N
- Sensor direct current three-wire system NPN
- Sensor Model D-M9N
- Harness length 3000mm
- Silicone pads

Sprue Gripper

PN	0244893
Model	ESA.SGA.1012C.CP

- 55g
- 12mm
- 80N
- 3 PNP
- D-M9P
- 3000mm
- Weight 55g
- Piston bore 12mm
- Aluminum jaws
- Single acting
- Grip:80N
- Sensor direct current three-wire system PNP
- Sensor Model D-M9P
- Harness length 3000mm
- Silicone pads

Sprue Gripper



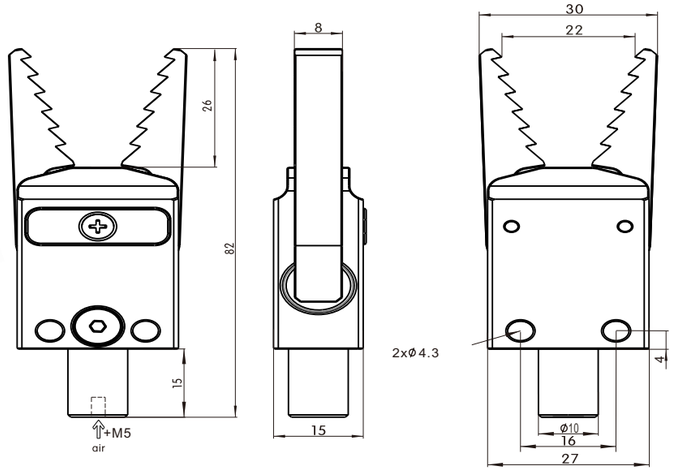

Sprue Gripper

PN	0247943
Model	ESA.SGA.1012D

- 75g
- 12mm
- 80N
- Weight 75g
- Piston bore 12mm
- steel jaws
- Single acting
- Grip:80N

Sprue Gripper



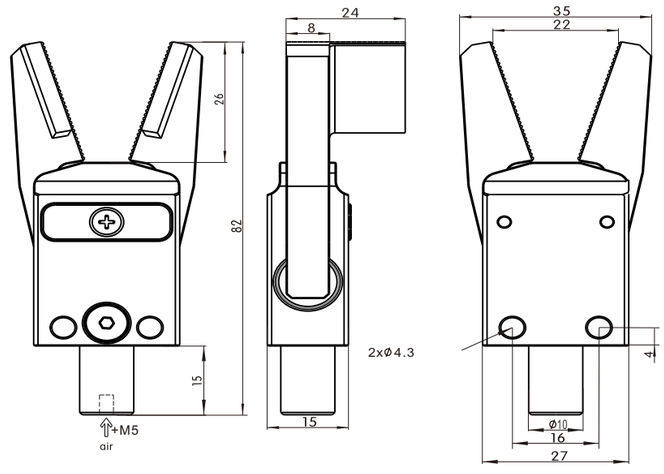

Sprue Gripper

PN	0245827
Model	ESA.SGA.1012E

- 55g
- 12mm
- 80N
- Weight 55g
- Piston bore 12mm
- Aluminum jaws
- Single acting
- Grip:80N

Sprue Gripper

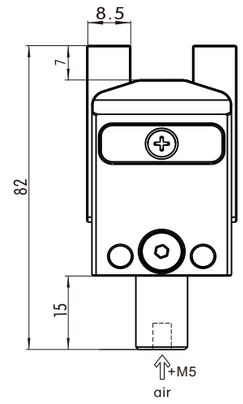

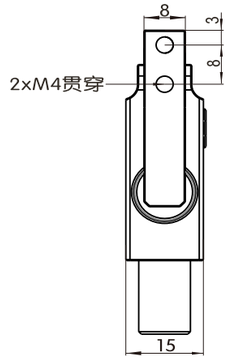

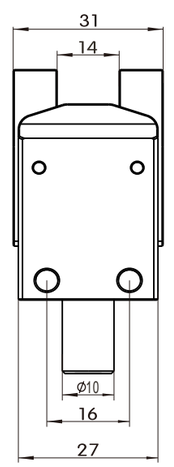

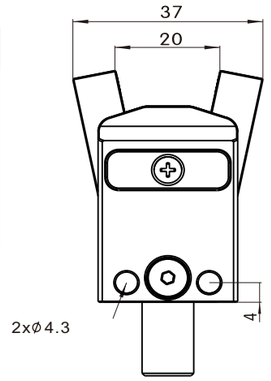



Sprue Gripper

PN	0246099
Model	ESA.SGA.1012F

- 46g
- 12mm
- 80N
- Weight 46g
- Piston bore 12mm
- steel jaws
- Single acting
- Grip:80N
- Custom jaws

Application example

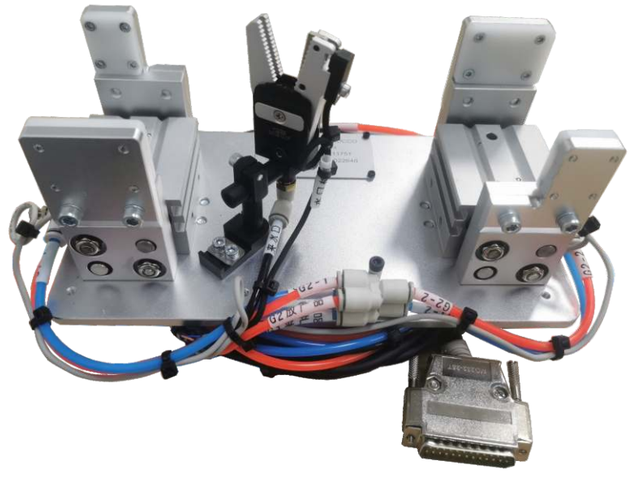

Sprue Gripper


ESA.SGA.1414A


ESA.SGA.1414B


ESA.SGA.1414C


ESA.SGA.1414D


ESA.SGA.1414E


ESA.SGA.1414F


ESA.SGA.1414A.CN
ESA.SGA.1414A.CP


ESA.SGA.1414B.CN
ESA.SGA.1414B.CP


ESA.SGA.1414C.CN
ESA.SGA.1414C.CP


ESA.SGA.1414D.CN
ESA.SGA.1414D.CP


ESA.SGA.1414E.CN
ESA.SGA.1414E.CP

Medium	Filtered&Compressed Air					
Pressure range	2.5~8bar					
Temperature range	5°~60°					
Strock	2x16°					
Max working Frequency	3HZ					
Cycle Air Consumption	1.4cm³					
Closing time without load	0.01s					
Closing gripping torque	130N/cm					
Opening gripping torque	7N/cm					
Air Inlet	M5					
Weight	68g/80g/80g	67g/78g/78g	65g/76g/76g	67g/78g/78g	63g/75g/75g	68g

Sprue Gripper



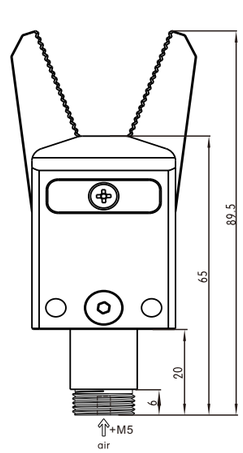

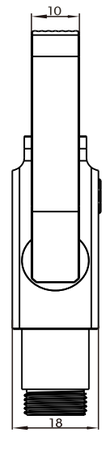

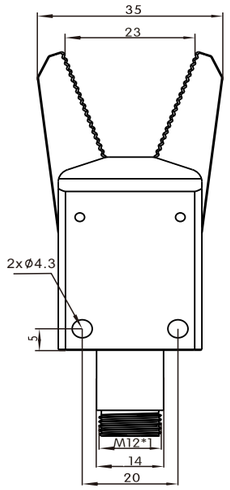

Sprue Gripper	
PN	0245510
Model	ESA.SGA.1414A

- 68g
- 14mm
- 130N
- Weight 68g
- Piston bore 14mm
- Aluminum jaws
- Single acting
- Grip:130N



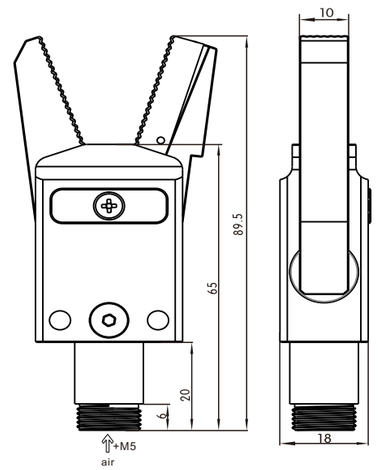

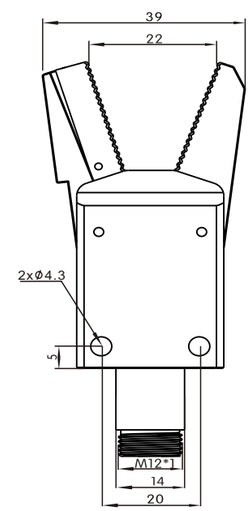

Sprue Gripper	
PN	0244970
Model	ESA.SGA.1414A.CN

- 80g
- 14mm
- 130N
- 3 NPN
- D-M9N
- 3000mm
- Weight 80g
- Piston bore 14mm
- Aluminum jaws
- Single acting
- Grip:130N
- Sensor direct current three-wire system NPN
- Sensor Model D-M9N
- Harness length 3000mm

Sprue Gripper	
PN	0243133
Model	ESA.SGA.1414A.CP

- 80g
- 14mm
- 130N
- 3 PNP
- D-M9P
- 3000mm
- Weight 80g
- Piston bore 14mm
- Aluminum jaws
- Single acting
- Grip:130N
- Sensor direct current three-wire system PNP
- Sensor Model D-M9P
- Harness length 3000mm

Sprue Gripper



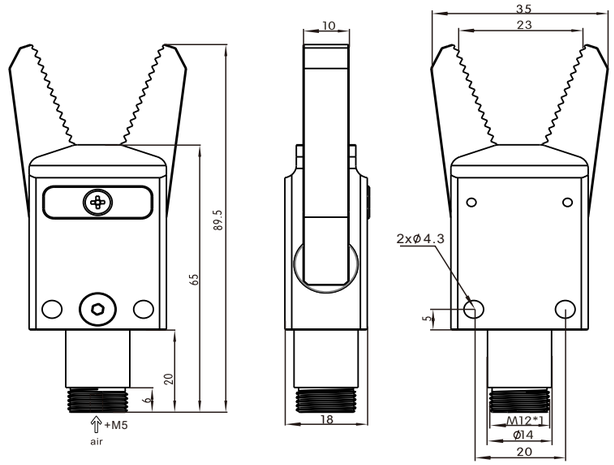

Sprue Gripper

PN	0248390
Model	ESA.SGA.1414B

- 67g
- 14mm
- 130N
- Weight 67g
- Piston bore 14mm
- Aluminum jaws
- Single acting
- Grip:130N

Sprue Gripper



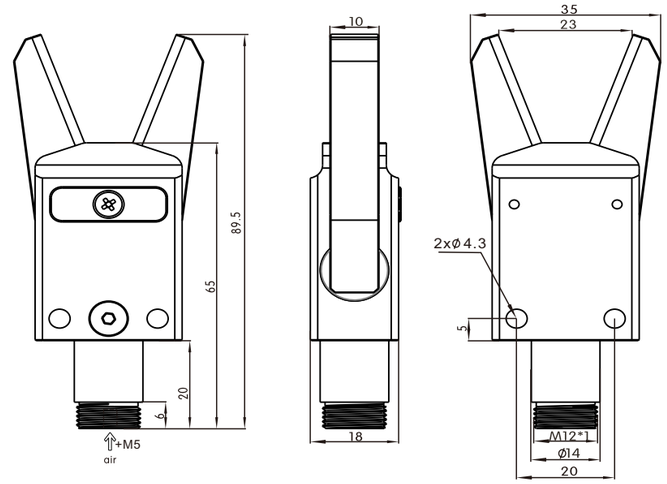

Sprue Gripper

PN	0240882
Model	ESA.SGA.1414C

- 65g
- 14mm
- 130N
- Weight 65g
- Piston bore 14mm
- Aluminum jaws
- Single acting
- Grip:130N
- Silicone pads



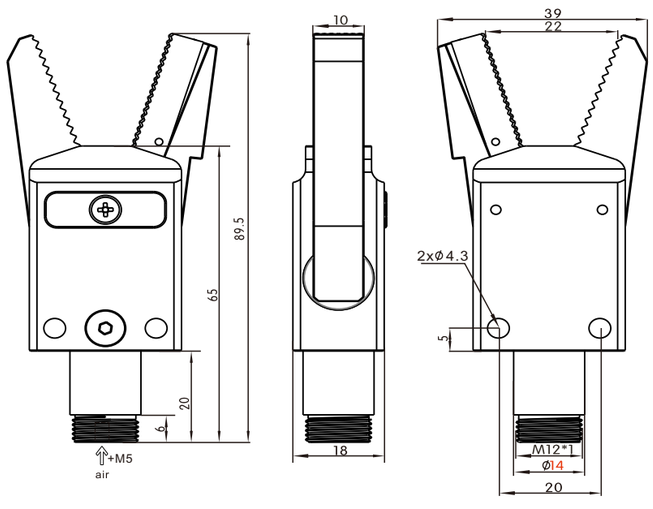

Sprue Gripper

PN	0245251
Model	ESA.SGA.1414B.CN

- 78g
- 14mm
- 130N
- 3 NPN
- D-M9N
- 3000mm
- Weight 78g
- Piston bore 14mm
- Aluminum jaws
- Single acting
- Grip:130N
- Sensor direct current three-wire system NPN
- Sensor Model D-M9N
- Harness length 3000mm

Sprue Gripper

PN	0241151
Model	ESA.SGA.1414B.CP

- 78g
- 14mm
- 130N
- 3 PNP
- D-M9P
- 3000mm
- Weight 78g
- Piston bore 14mm
- Aluminum jaws
- Single acting
- Grip:130N
- Sensor direct current three-wire system PNP
- Sensor Model D-M9P
- Harness length 3000mm



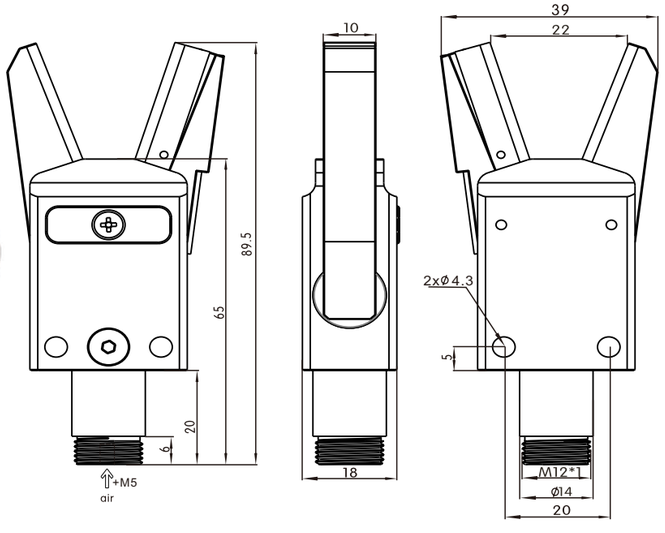

Sprue Gripper

PN	0248769
Model	ESA.SGA.1414C.CN

- 76g
- 14mm
- 130N
- 3 NPN
- D-M9N
- 3000mm
- Weight 76g
- Piston bore 14mm
- Aluminum jaws
- Single acting
- Grip:130N
- Sensor direct current three-wire system NPN
- Sensor Model D-M9N
- Harness length 3000mm
- Silicone pads

Sprue Gripper

PN	0245738
Model	ESA.SGA.1414C.CP

- 76g
- 14mm
- 130N
- 3 PNP
- D-M9P
- 3000mm
- Weight 76g
- Piston bore 14mm
- Aluminum jaws
- Single acting
- Grip:130N
- Sensor direct current three-wire system PNP
- Sensor Model D-M9P
- Harness length 3000mm
- Silicone pads

Sprue Gripper



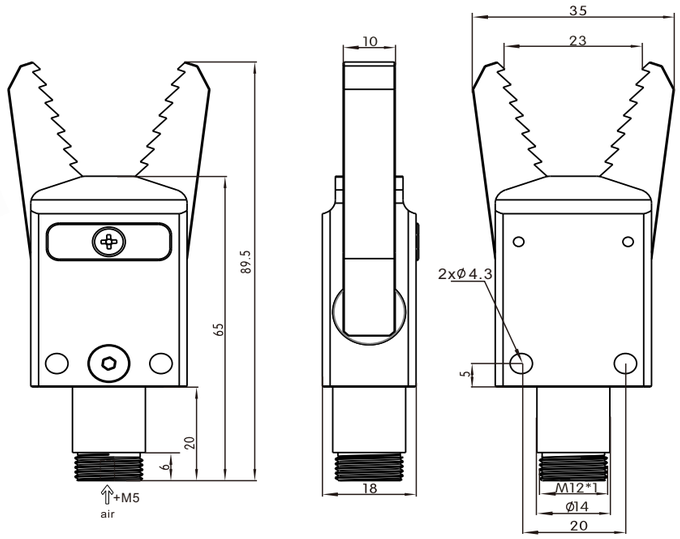

Sprue Gripper

PN	0247319
Model	ESA.SGA.1414D

- 67g
- 14mm
- 130N
- Weight 67g
- Piston bore 14mm
- Aluminum jaws
- Single acting
- Grip:130N

Sprue Gripper



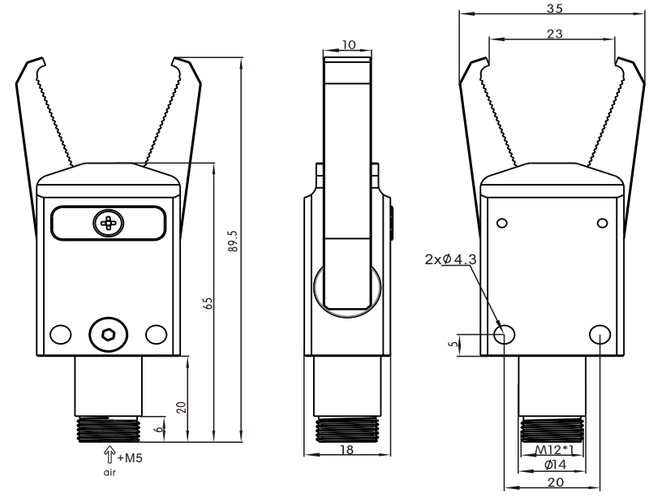

Sprue Gripper

PN	0246197
Model	ESA.SGA.1414E

- 63g
- 14mm
- 130N
- Weight 63g
- Piston bore 14mm
- Aluminum jaws
- Single acting
- Grip:130N



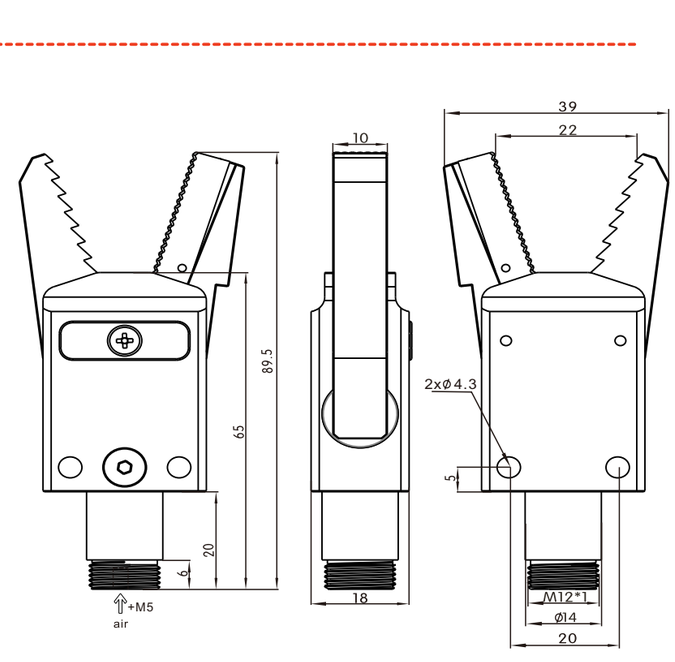

Sprue Gripper

PN	0241987
Model	ESA.SGA.1414D.CN

- 78g
- 14mm
- 130N
- 3 NPN
- D-M9N
- 3000mm
- Weight 78g
- Piston bore 14mm
- Aluminum jaws
- Single acting
- Grip:130N
- Sensor direct current three-wire system NPN
- Sensor Model D-M9N
- Harness length 3000mm

Sprue Gripper

PN	0249118
Model	ESA.SGA.1414D.CP

- 78g
- 14mm
- 130N
- 3 PNP
- D-M9P
- 3000mm
- Weight 78g
- Piston bore 14mm
- Aluminum jaws
- Single acting
- Grip:130N
- Sensor direct current three-wire system PNP
- Sensor Model D-M9P
- Harness length 3000mm



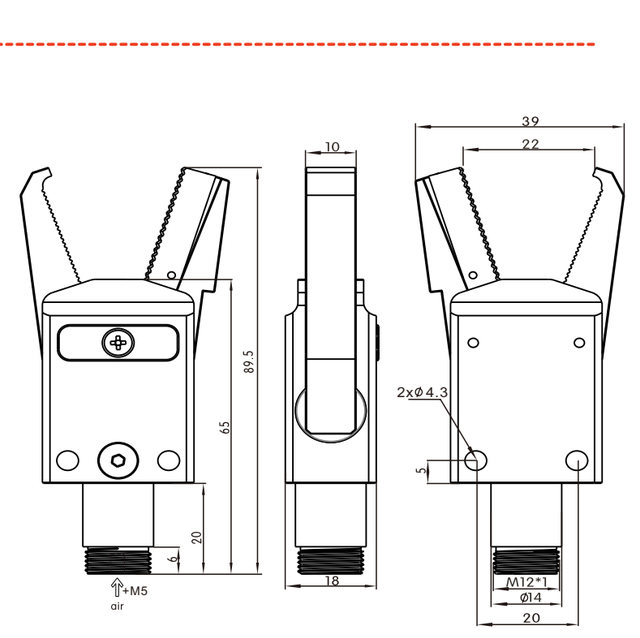

Sprue Gripper

PN	0243921
Model	ESA.SGA.1414E.CN

- 75g
- 14mm
- 130N
- 3 NPN
- D-M9N
- 3000mm
- Weight 75g
- Piston bore 14mm
- Aluminum jaws
- Single acting
- Grip:130N
- Sensor direct current three-wire system NPN
- Sensor Model D-M9N
- Harness length 3000mm

Sprue Gripper

PN	0240739
Model	ESA.SGA.1414E.CP

- 75g
- 14mm
- 130N
- 3 PNP
- D-M9P
- 3000mm
- Weight 75g
- Piston bore 14mm
- Aluminum jaws
- Single acting
- Grip:130N
- Sensor direct current three-wire system PNP
- Sensor Model D-M9P
- Harness length 3000mm

Sprue Gripper

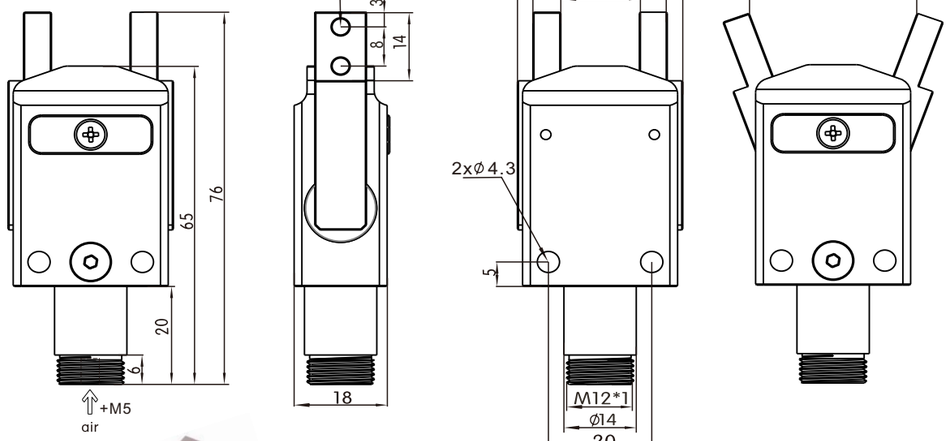



Sprue Gripper

PN	0249691
Model	ESA.SGA.1414F

- 68g
- 14mm
- 80N
- Weight 68g
- Piston bore 14mm
- steel jaws
- Single acting
- Grip:80N
- Custom jaws

Sprue Gripper



ESA.SGA.2020A



ESA.SGA.2020B



ESA.SGA.2020C



ESA.SGA.2020D



ESA.SGA.2020G.CN
ESA.SGA.2020G.CP



ESA.SGA.2020A.CN
ESA.SGA.2020A.CP



ESA.SGA.2020B.CN
ESA.SGA.2020B.CP



ESA.SGA.2020C.CN
ESA.SGA.2020C.CP



ESA.SGA.2020D.CN
ESA.SGA.2020D.CP

Model							
Medium	Filtered&Compressed Air						
Pressure range	2.5~8bar						
Temperature range	5°~60°						
Strock	2x14°						
Max working Frequency	2HZ						
Cycle Air Consumption	2.7cm³						
Closing time without load	0.01s						
Closing gripping torque	270N/cm						
Opening gripping torque	10N/cm						
Air Inlet	M5						
Weight	112g/137g/137g	112g/137g/137g	140g/158g/158g	149g/160g/160g	118g/141g/141g	159g/175g/175g	138g/155g/155g

Sprue Gripper



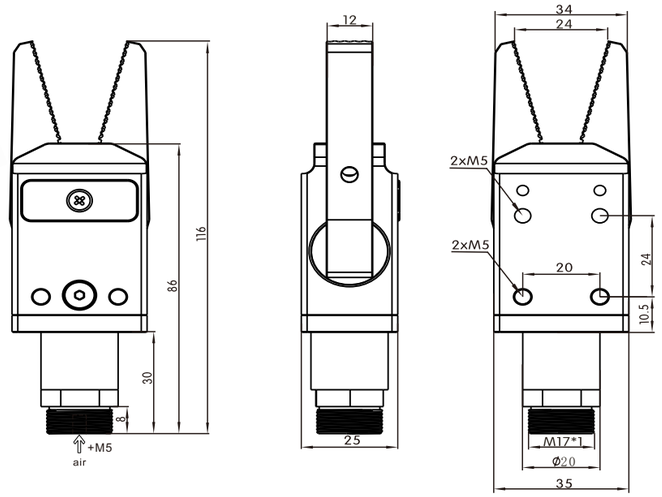

Sprue Gripper

PN	0246491
Model	ESA.SGA.2020A

- 112g
- 20mm
- 270N
- Weight 112g
- Piston bore 20mm
- Aluminum jaws
- Single acting
- Grip:270N

Sprue Gripper



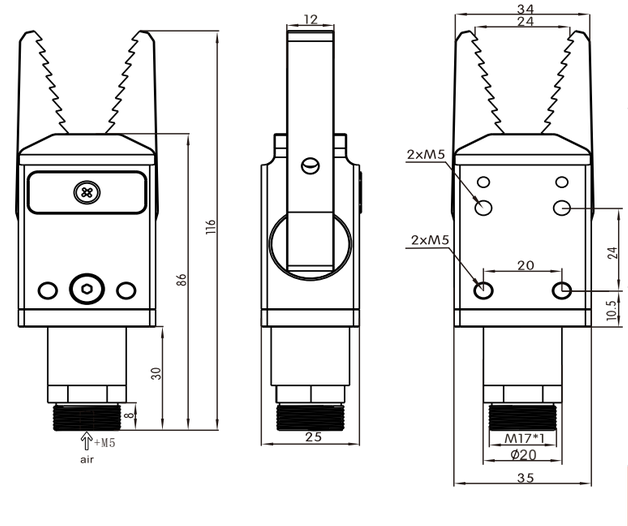

Sprue Gripper

PN	0247897
Model	ESA.SGA.2020B

- 112g
- 20mm
- 270N
- Weight 112g
- Piston bore 20mm
- Aluminum jaws
- Single acting
- Grip:270N



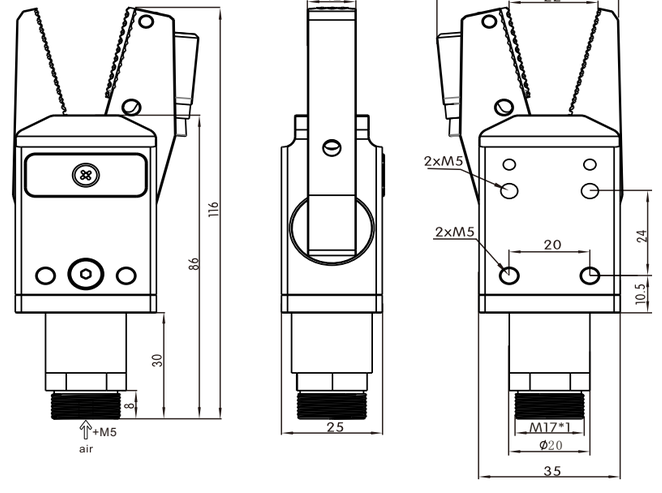

Sprue Gripper

PN	0249497
Model	ESA.SGA.2020A.CN

- 137g
- 20mm
- 270N
- 3 NPN
- GX-F8A
- 1000mm
- Weight 137g
- Piston bore 20mm
- Aluminum jaws
- Single acting
- Grip:270N
- Sensor direct current three-wire system NPN
- Sensor Model GX-F8A
- Harness length 1000mm

Sprue Gripper

PN	0247140
Model	ESA.SGA.2020A.CP

- 137g
- 20mm
- 270N
- 3 PNP
- GX-F8A-P
- 1000mm
- Weight 137g
- Piston bore 20mm
- Aluminum jaws
- Single acting
- Grip:270N
- Sensor direct current three-wire system PNP
- Sensor Model GX-F8A-P
- Harness length 1000mm



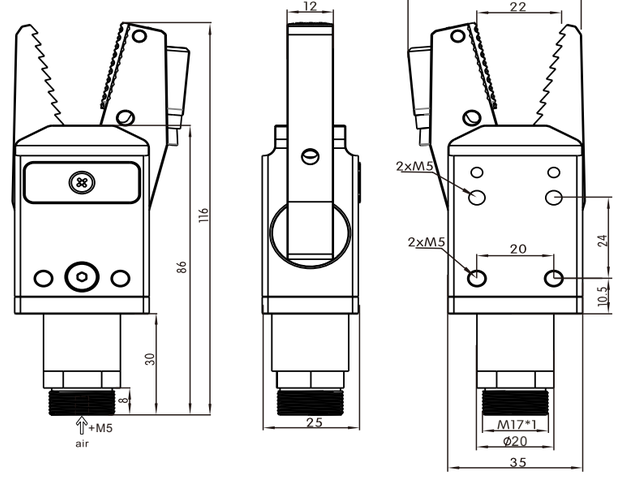

Sprue Gripper

PN	0248338
Model	ESA.SGA.2020B.CN

- 137g
- 20mm
- 270N
- 3 NPN
- GX-F8A
- 1000mm
- Weight 137g
- Piston bore 20mm
- Aluminum jaws
- Single acting
- Grip:270N
- Sensor direct current three-wire system NPN
- Sensor Model GX-F8A
- Harness length 1000mm

Sprue Gripper

PN	0243939
Model	ESA.SGA.2020B.CP

- 137g
- 20mm
- 270N
- 3 PNP
- GX-F8A-P
- 1000mm
- Weight 137g
- Piston bore 20mm
- Aluminum jaws
- Single acting
- Grip:270N
- Sensor direct current three-wire system PNP
- Sensor Model GX-F8A-P
- Harness length 1000mm

Sprue Gripper



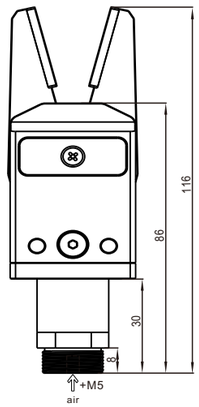

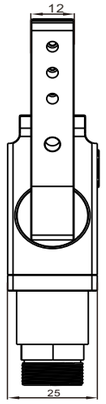

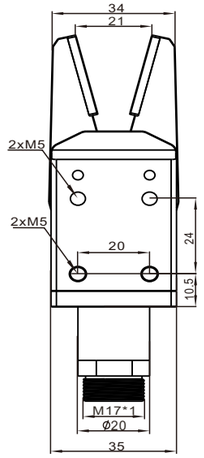

Sprue Gripper

PN	0245743
Model	ESA.SGA.2020C

- 112g
- 20mm
- 270N
- Weight 112g
- Piston bore 20mm
- Aluminum jaws
- Single acting
- Grip:270N
- Silicone pads



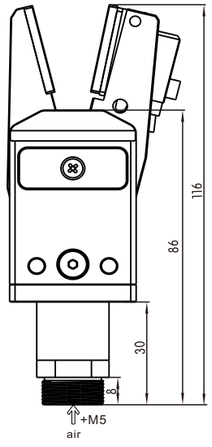

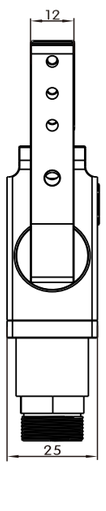

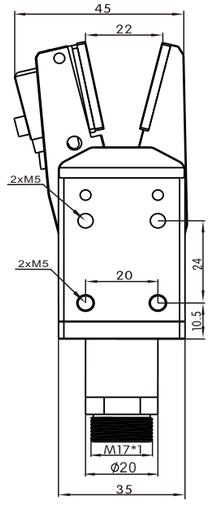

Sprue Gripper

PN	0246390
Model	ESA.SGA.2020C.CN

- 137g
- 20mm
- 270N
- 3 NPN
- GX-F8A
- 1000mm
- Weight 137g
- Piston bore 20mm
- Aluminum jaws
- Single acting
- Grip:270N
- Sensor direct current three-wire system NPN
- Sensor Model GX-F8A
- Harness length 1000mm
- Silicone pads

Sprue Gripper

PN	0240647
Model	ESA.SGA.2020C.CP

- 137g
- 20mm
- 270N
- 3 PNP
- GX-F8A-P
- 1000mm
- Weight 137g
- Piston bore 20mm
- Aluminum jaws
- Single acting
- Grip:270N
- Sensor direct current three-wire system PNP
- Sensor Model GX-F8A-P
- Harness length 1000mm
- Silicone pads

Sprue Gripper



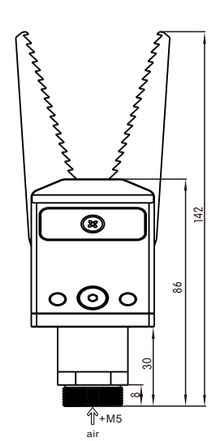

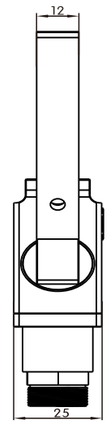

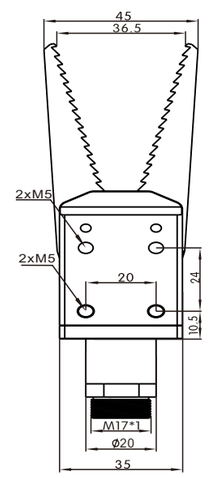

Sprue Gripper

PN	0246156
Model	ESA.SGA.2020D

- 112g
- 20mm
- 270N
- Weight 112g
- Piston bore 20mm
- Aluminum jaws
- Single acting
- Grip:270N



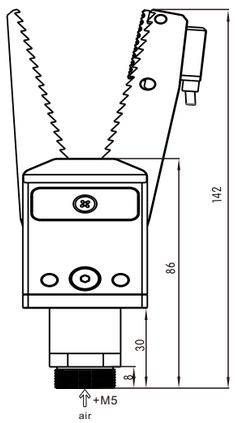

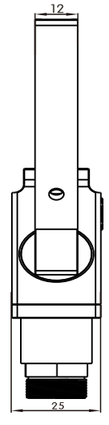

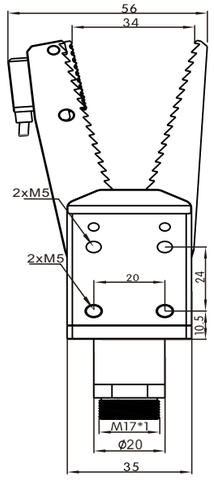

Sprue Gripper

PN	0244161
Model	ESA.SGA.2020D.CN

- 137g
- 20mm
- 270N
- 3 NPN
- GX-F8A
- 1000mm
- Weight 137g
- Piston bore 20mm
- Aluminum jaws
- Single acting
- Grip:270N
- Sensor direct current three-wire system NPN
- Sensor Model GX-F8A
- Harness length 1000mm

Sprue Gripper

PN	0248422
Model	ESA.SGA.2020D.CP

- 137g
- 20mm
- 270N
- 3 PNP
- GX-F8A-P
- 1000mm
- Weight 137g
- Piston bore 20mm
- Aluminum jaws
- Single acting
- Grip:270N
- Sensor direct current three-wire system PNP
- Sensor Model GX-F8A-P
- Harness length 1000mm

Sprue Gripper

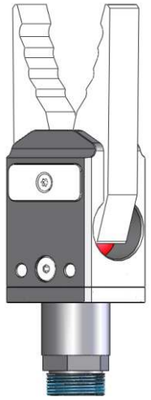

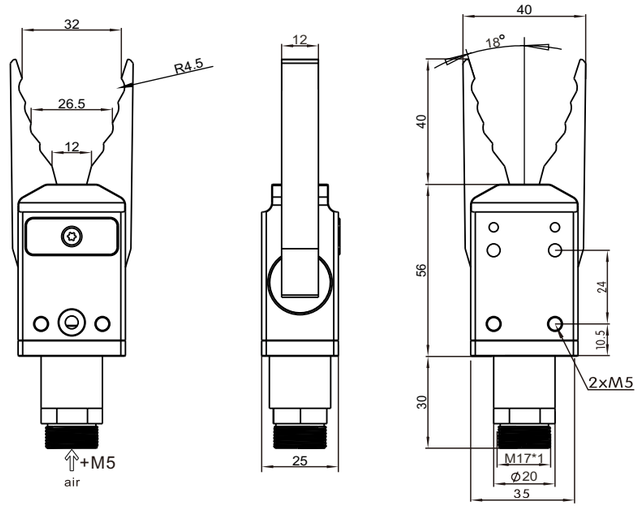

Sprue Gripper

PN	0245187
Model	ESA.SGA.2020G

- 112g
- 20mm
- 270N
- Weight 112g
- Piston bore 20mm
- Aluminum jaws
- Single acting
- Grip:270N

Sprue Gripper



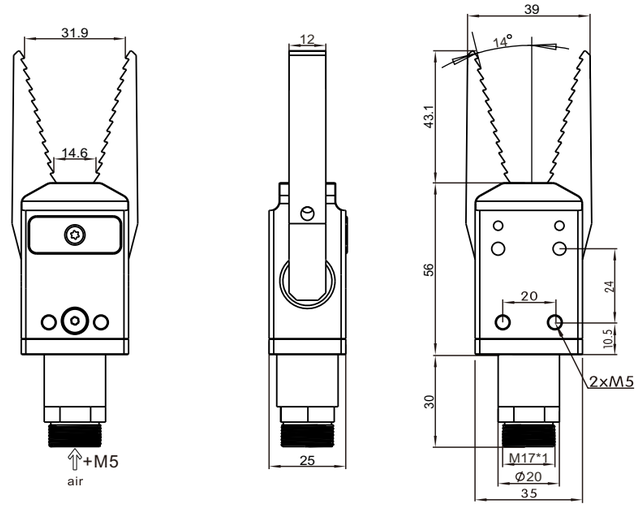

Sprue Gripper

PN	0249207
Model	ESA.SGA.2020S

- 112g
- 20mm
- 270N
- Weight 112g
- Piston bore 20mm
- Aluminum jaws
- Single acting
- Grip:270N



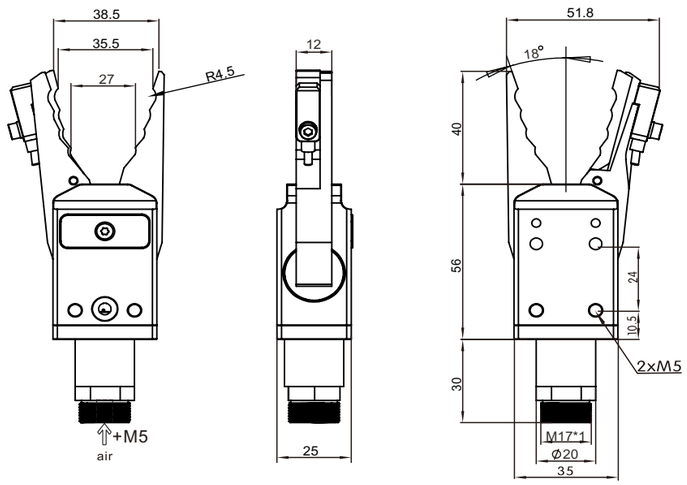

Sprue Gripper

PN	0243122
Model	ESA.SGA.2020G.CN

- 137g
- 20mm
- 270N
- 3 NPN
- GX-F8A
- 1000mm
- Weight 137g
- Piston bore 20mm
- Aluminum jaws
- Single acting
- Grip:270N
- Sensor direct current three-wire system NPN
- Sensor Model GX-F8A
- Harness length 1000mm

Sprue Gripper

PN	0243998
Model	ESA.SGA.2020G.CP

- 137g
- 20mm
- 270N
- 3 PNP
- GX-F8A-P
- 1000mm
- Weight 137g
- Piston bore 20mm
- Aluminum jaws
- Single acting
- Grip:270N
- Sensor direct current three-wire system PNP
- Sensor Model GX-F8A-P
- Harness length 1000mm

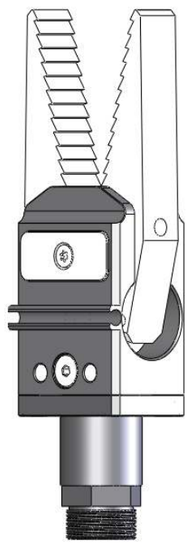

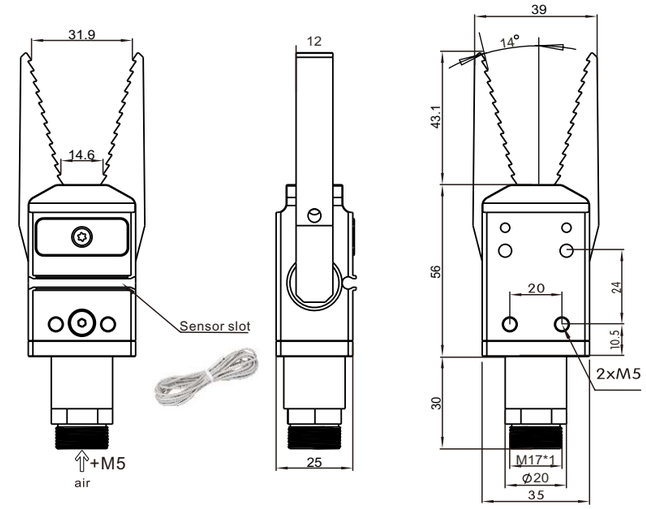

Sprue Gripper

PN	0244446
Model	ESA.SGA.2020S.CN

- 137g
- 20mm
- 270N
- 3 NPN
- D-M9N
- 3000mm
- Weight 137g
- Piston bore 20mm
- Aluminum jaws
- Single acting
- Grip:270N
- Sensor direct current three-wire system NPN
- Sensor Model D-M9N
- Harness length 3000mm

Sprue Gripper

PN	0243004
Model	ESA.SGA.2020S.CP

- 137g
- 20mm
- 270N
- 3 PNP
- D-M9P
- 3000mm
- Weight 137g
- Piston bore 20mm
- Aluminum jaws
- Single acting
- Grip:270N
- Sensor direct current three-wire system PNP
- Sensor Model D-M9P
- Harness length 3000mm

Sprue Gripper



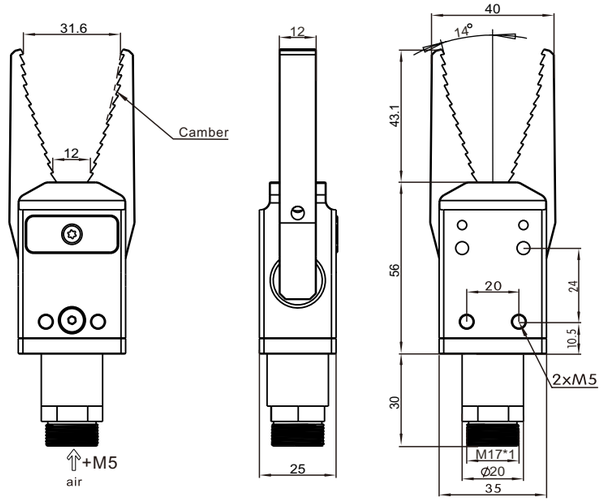

Sprue Gripper

PN	0243877
Model	ESA.SGA.2020Z

- 112g
- 20mm
- 270N
- Weight 112g
- Piston bore 20mm
- Aluminum jaws
- Single acting
- Grip:270N

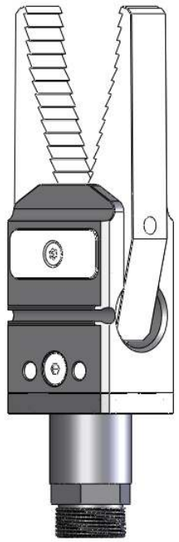

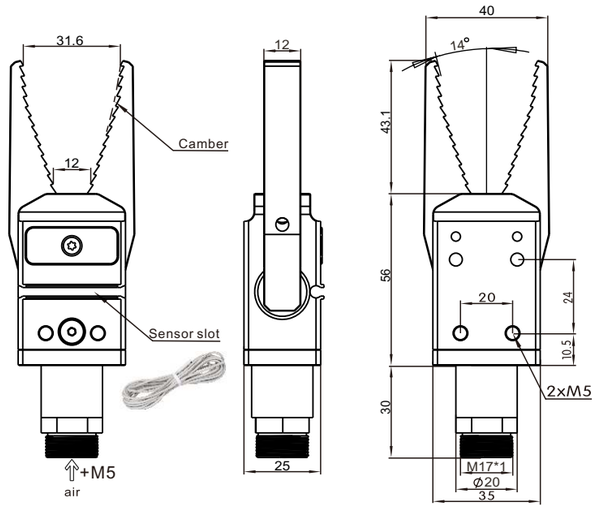

Sprue Gripper

PN	0243498
Model	ESA.SGA.2020Z.CN

- 137g
- 20mm
- 270N
- 3 NPN
- D-M9N
- 3000mm
- Weight 137g
- Piston bore 20mm
- Aluminum jaws
- Single acting
- Grip:270N
- Sensor direct current three-wire system NPN
- Sensor Model D-M9N
- Harness length 3000mm

Sprue Gripper

PN	0242287
Model	ESA.SGA.2020Z.CP

- 137g
- 20mm
- 270N
- 3 PNP
- D-M9P
- 3000mm
- Weight 137g
- Piston bore 20mm
- Aluminum jaws
- Single acting
- Grip:270N
- Sensor direct current three-wire system PNP
- Sensor Model D-M9P
- Harness length 3000mm

Sprue Gripper



ESA.SGT.1414A



ESA.SGT.1414B



ESA.SGT.1414C

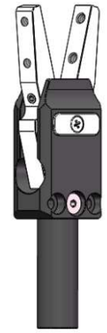

ESA.SGT.1414D



ESA.SGT.1414A.CN
ESA.SGT.1414A.CP



ESA.SGT.1414B.CN
ESA.SGT.1414B.CP



ESA.SGT.1414C.CN
ESA.SGT.1414C.CP

Model				
Medium	Filtered&Compressed Air			
Pressure range	2.5~8bar			
Temperature range	5°~60°			
Strock	2x14°			
Max working Frequency	3HZ			
Cycle Air Consumption	1.4cm³			
Closing time without load	0.01s			
Closing gripping torque	80N/cm			
Opening gripping torque	5N/cm			
Air Inlet	G1/8			
Weight	80g/100g/100g	77g/96g/96g	76g/95g/95g	75g

Sprue Gripper



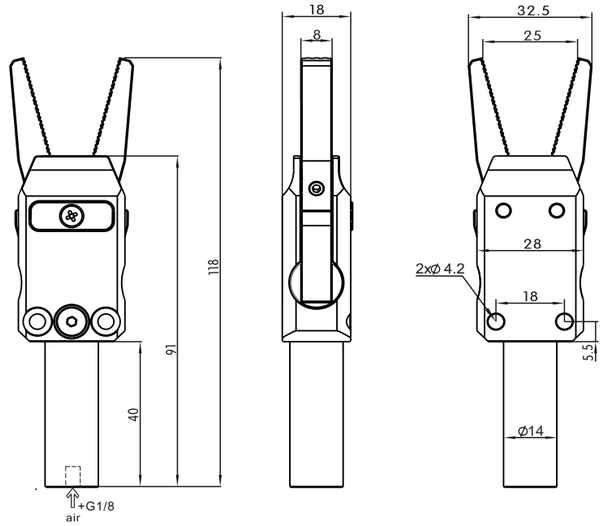

Sprue Gripper

PN	0249837
Model	ESA.SGT.1414A

- 80g
- 14mm
- 80N
- Weight 80g
- Piston bore 14mm
- Steel jaws
- Single acting
- Grip:80N

Sprue Gripper



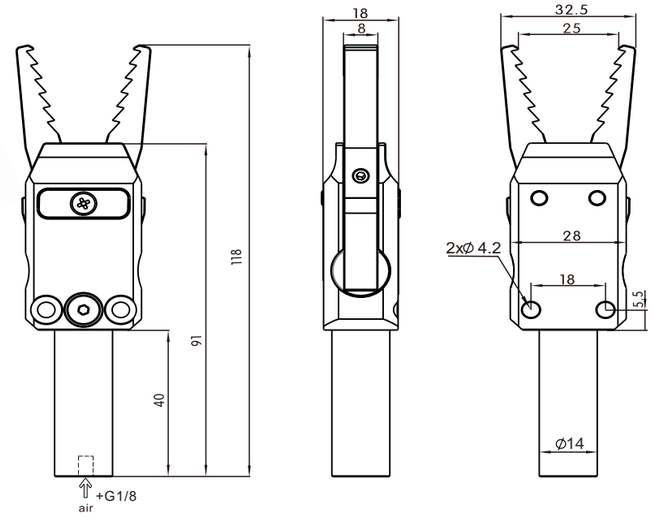

Sprue Gripper

PN	0244104
Model	ESA.SGT.1414B

- 77g
- 14mm
- 80N
- Weight 77g
- Piston bore 14mm
- Steel jaws
- Single acting
- Grip:80N



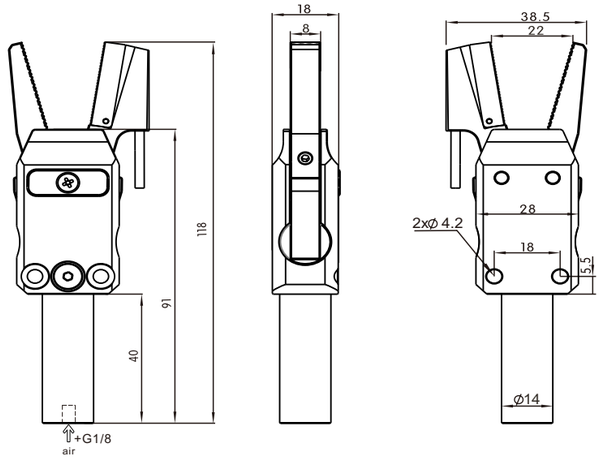

Sprue Gripper

PN	0244814
Model	ESA.SGT.1414A.CN

- 100g
- 14mm
- 80N
- 3 NPN
- D-M9N
- 3000mm
- Weight 100g
- Piston bore 14mm
- Steel jaws
- Single acting
- Grip:80N
- Sensor direct current three-wire system NPN
- Sensor Model D-M9N
- Harness length 3000mm

Sprue Gripper

PN	0248873
Model	ESA.SGT.1414A.CP

- 100g
- 14mm
- 80N
- 3 PNP
- D-M9P
- 3000mm
- Weight 100g
- Piston bore 14mm
- Steel jaws
- Single acting
- Grip:80N
- Sensor direct current three-wire system PNP
- Sensor Model D-M9P
- Harness length 3000mm



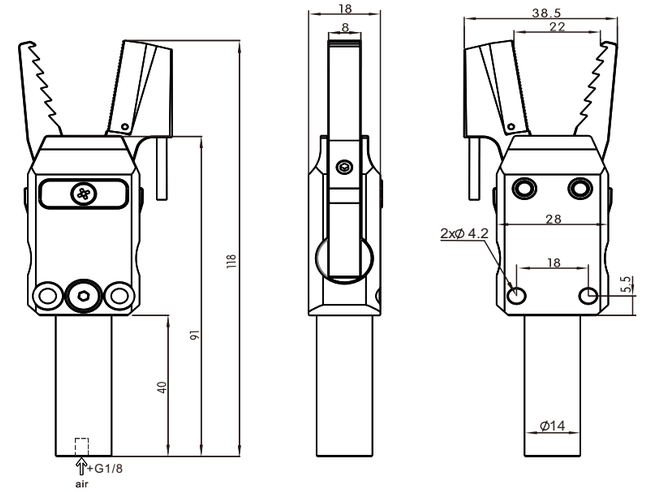

Sprue Gripper

PN	0243060
Model	ESA.SGT.1414B.CN

- 96g
- 14mm
- 80N
- 3 NPN
- D-M9N
- 3000mm
- Weight 96g
- Piston bore 14mm
- Steel jaws
- Single acting
- Grip:80N
- Sensor direct current three-wire system NPN
- Sensor Model D-M9P
- Harness length 3000mm

Sprue Gripper

PN	0247845
Model	ESA.SGT.1414B.CP

- 96g
- 14mm
- 80N
- 3 PNP
- D-M9P
- 3000mm
- Weight 96g
- Piston bore 14mm
- Steel jaws
- Single acting
- Grip:80N
- Sensor direct current three-wire system PNP
- Sensor Model D-M9P
- Harness length 3000mm

Sprue Gripper



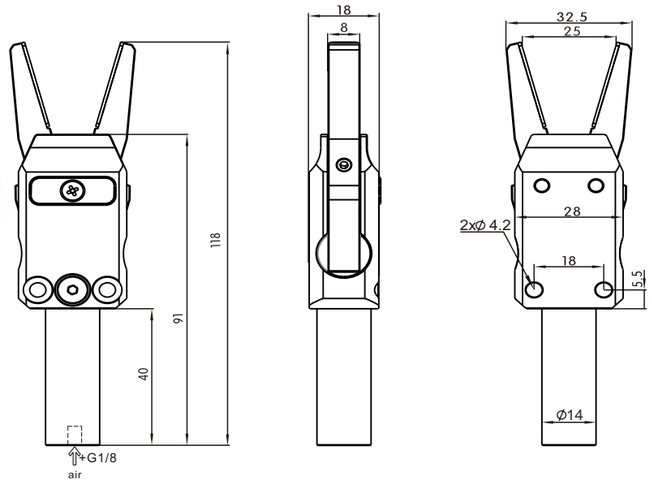

Sprue Gripper	
PN	0249682
Model	ESA.SGT.1414C

- 76g
- 14mm
- 80N
- Weight 76g
- Piston bore 14mm
- Steel jaws
- Single acting
- Grip:80N
- Silicone pads

Sprue Gripper



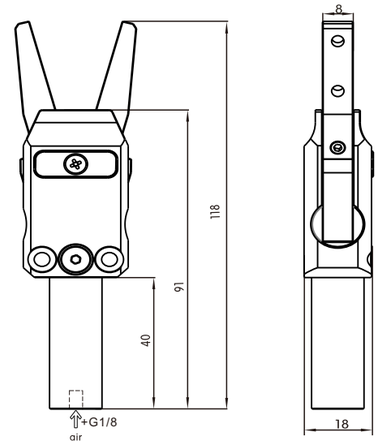

Sprue Gripper	
PN	0241404
Model	ESA.SGT.1414D

- 95g
- 14mm
- 80N
- Weight 95g
- Piston bore 14mm
- Aluminum jaws
- Single acting
- Grip:80N
- Custom jaws



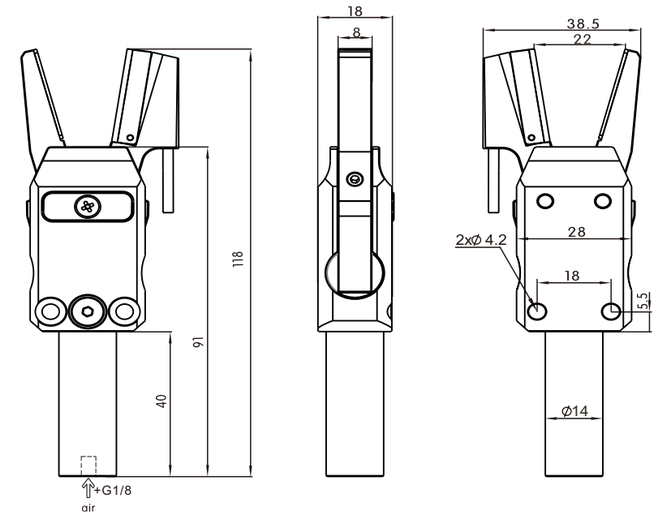

Sprue Gripper	
PN	0242594
Model	ESA.SGT.1414C.CN

- 95g
- 14mm
- 80N
- 3 NPN
- D-M9N
- 3000mm
- Weight 95g
- Piston bore 14mm
- Steel jaws
- Single acting
- Grip:80N
- Sensor direct current three-wire system NPN
- Sensor Model D-M9N
- Harness length 3000mm
- Silicone pads

Sprue Gripper	
PN	0242965
Model	ESA.SGT.1414C.CP

- 95g
- 20mm
- 80N
- 3 PNP
- D-M9P
- 3000mm
- Weight 95g
- Piston bore 20mm
- Aluminum jaws
- Single acting
- Grip:80N
- Sensor direct current three-wire system PNP
- Sensor Model D-M9P
- Harness length 3000mm
- Silicone pads

Sprue Gripper


ESA.SGT.2016A


ESA.SGT.2016B


ESA.SGT.2016C


ESA.SGT.2016D


ESA.SGT.2016E


ESA.SGT.2016F


ESA.SGT.2016A.CN
ESA.SGT.2016A.CP


ESA.SGT.2016B.CN
ESA.SGT.2016B.CP


ESA.SGT.2016C.CN
ESA.SGT.2016C.CP


ESA.SGT.2016D.CN
ESA.SGT.2016D.CP


ESA.SGT.2016F.CN
ESA.SGT.2016F.CP

Medium	Filtered&Compressed Air
Pressure range	2.5~8bar
Temperature range	5°~60°
Strock	2x15°
Max working Frequency	3HZ
Cycle Air Consumption	3.6cm³
Closing time without load	0.01s
Closing gripping torque	300N/cm
Opening gripping torque	20N/cm
Air Inlet	M5
Weight	165g/190g/190g 160g/185g/185g 162g/192g/192g 170g/201g/201g 152g 161g/191g/191g

Sprue Gripper



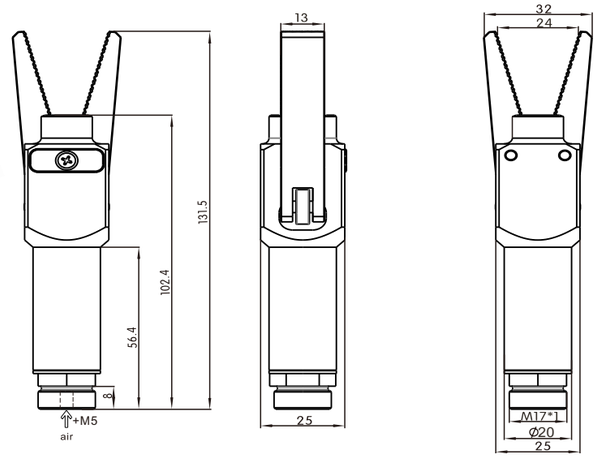

Sprue Gripper

PN	0246809
Model	ESA.SGT.2016A

- 165g
- 16mm
- 300N
- Weight 165g
- Piston bore 16mm
- Steel jaws
- Single acting
- Grip:300N



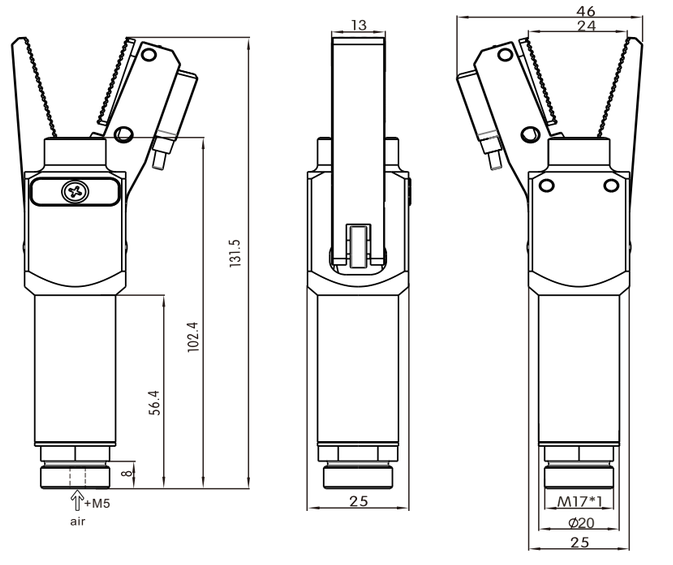

Sprue Gripper

PN	0240296
Model	ESA.SGT.2016A.CN

- 190g
- 16mm
- 300N
- 3 NPN
- GX-F8A
- 1000mm
- Weight 190g
- Piston bore 16mm
- Steel jaws
- Single acting
- Grip:300N
- Sensor direct current three-wire system NPN
- Sensor Model GX-F8A
- Harness length 1000mm

Sprue Gripper

PN	0245105
Model	ESA.SGT.2016A.CP

- 190g
- 16mm
- 300N
- 3 PNP
- GX-F8A-P
- 1000mm
- Weight 190g
- Piston bore 16mm
- Steel jaws
- Single acting
- Grip:300N
- Sensor direct current three-wire system PNP
- Sensor Model GX-F8A-P
- Harness length 1000mm

Sprue Gripper



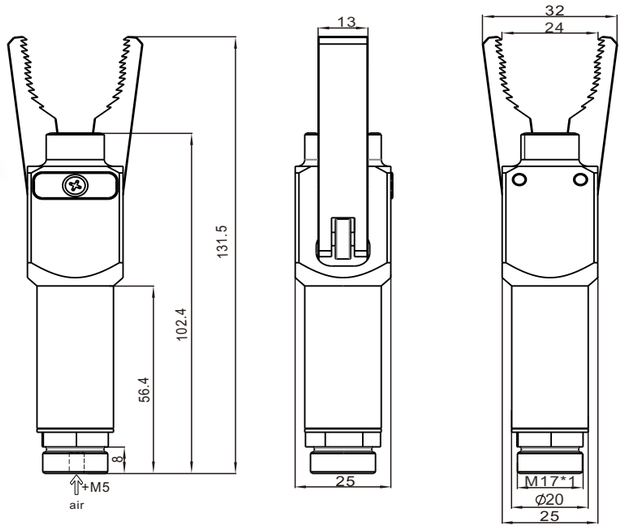

Sprue Gripper

PN	0241742
Model	ESA.SGT.2016B

- 160g
- 16mm
- 300N
- Weight 160g
- Piston bore 16mm
- Steel jaws
- Single acting
- Grip:300N

Sprue Gripper



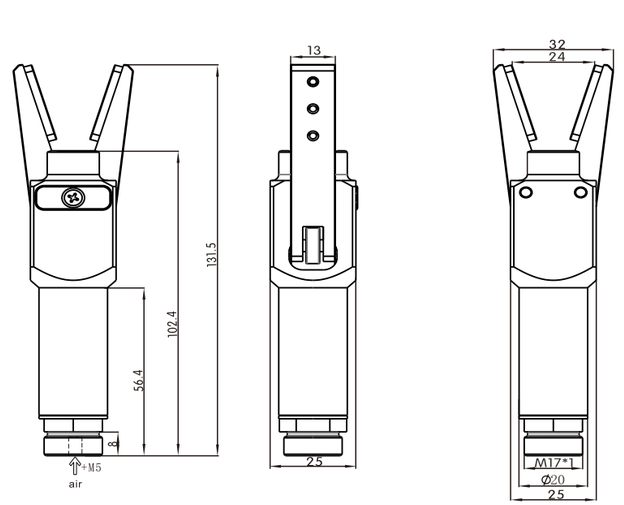

Sprue Gripper

PN	0243404
Model	ESA.SGT.2016C

- 162g
- 16mm
- 300N
- Weight 162g
- Piston bore 16mm
- Steel jaws
- Single acting
- Grip:300N
- Silicone pads



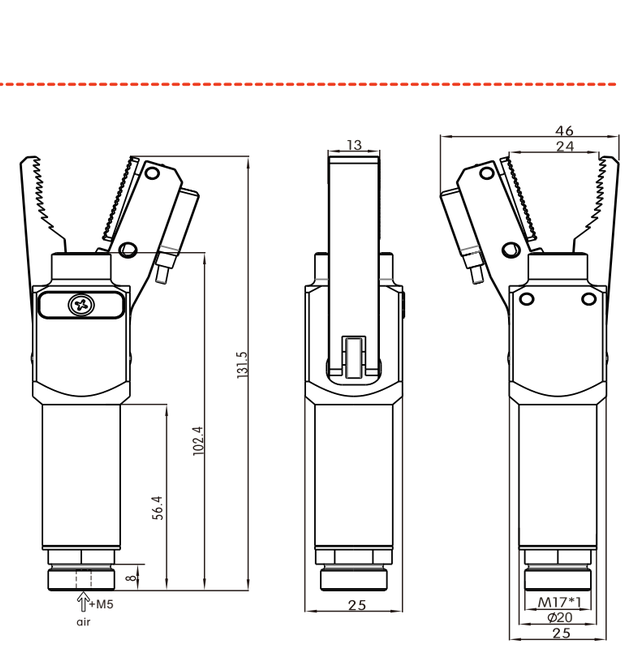

Sprue Gripper

PN	0248015
Model	ESA.SGT.2020B.CN

- 185g
- 16mm
- 300N
- 3 NPN
- GX-F8A
- 1000mm
- Weight 185g
- Piston bore 16mm
- Steel jaws
- Single acting
- Grip:300N
- Sensor direct current three-wire system NPN
- Sensor Model GX-F8A
- Harness length 1000mm

Sprue Gripper

PN	0242521
Model	ESA.SGT.2020B.CP

- 185g
- 20mm
- 270N
- 3 PNP
- GX-F8A-P
- 1000mm
- Weight 185g
- Piston bore 20mm
- Aluminum jaws
- Single acting
- Grip:270N
- Sensor direct current three-wire system PNP
- Sensor Model GX-F8A-P
- Harness length 1000mm



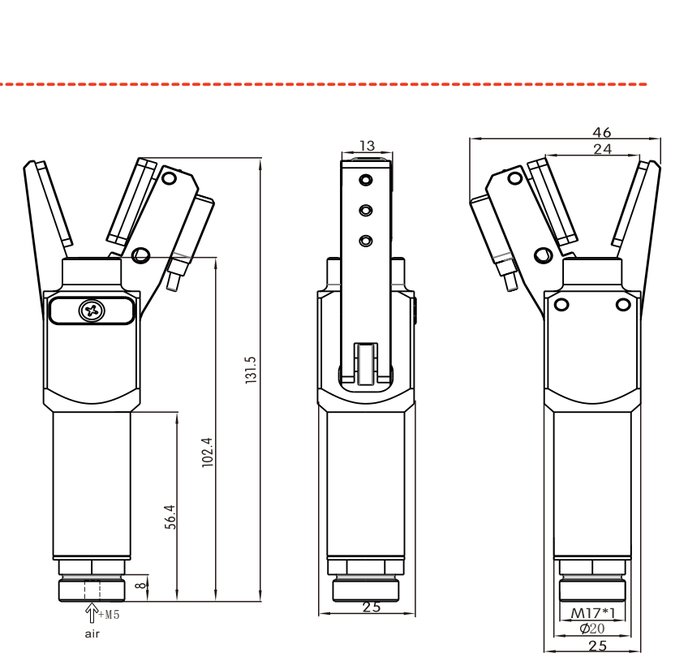

Sprue Gripper

PN	0244428
Model	ESA.SGT.2016C.CN

- 192g
- 16mm
- 300N
- 3 NPN
- GX-F8A
- 1000mm
- Weight 192g
- Piston bore 16mm
- Steel jaws
- Single acting
- Grip:300N
- Sensor direct current three-wire system NPN
- Sensor Model GX-F8A
- Harness length 1000mm
- Silicone pads

Sprue Gripper

PN	0249716
Model	ESA.SGT.2016C.CP

- 192g
- 16mm
- 300N
- 3 PNP
- GX-F8A-P
- 1000mm
- Weight 192g
- Piston bore 16mm
- Steel jaws
- Single acting
- Grip:300N
- Sensor direct current three-wire system PNP
- Sensor Model GX-F8A-P
- Harness length 1000mm
- Silicone pads

Sprue Gripper



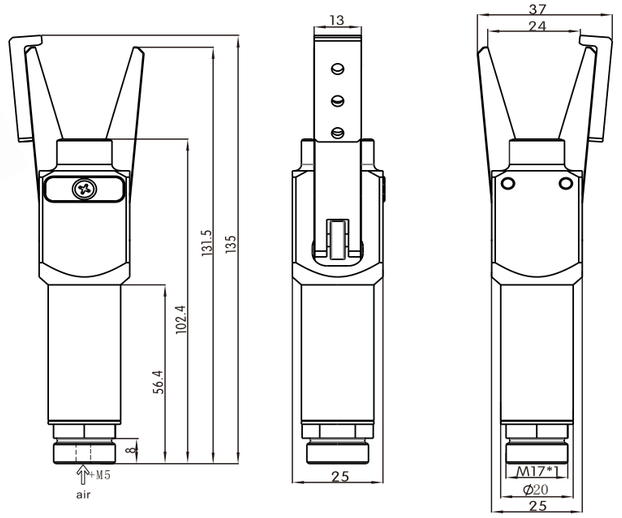

Sprue Gripper

PN	0241644
Model	ESA.SGT.2016D

- 170g
- 16mm
- 300N
- Weight 170g
- Piston bore 16mm
- Steeljaws
- Single acting
- Grip:300N

Sprue Gripper



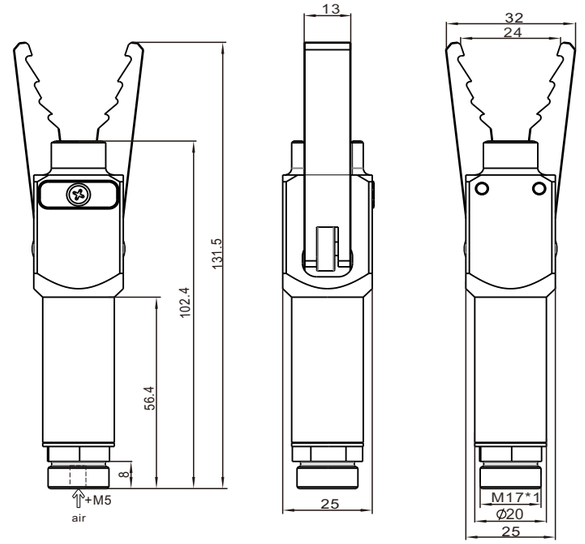

Sprue Gripper

PN	0248551
Model	ESA.SGT.2016F

- 161g
- 16mm
- 300N
- Weight 161g
- Piston bore 16mm
- Steel jaws
- Single acting
- Grip:300N



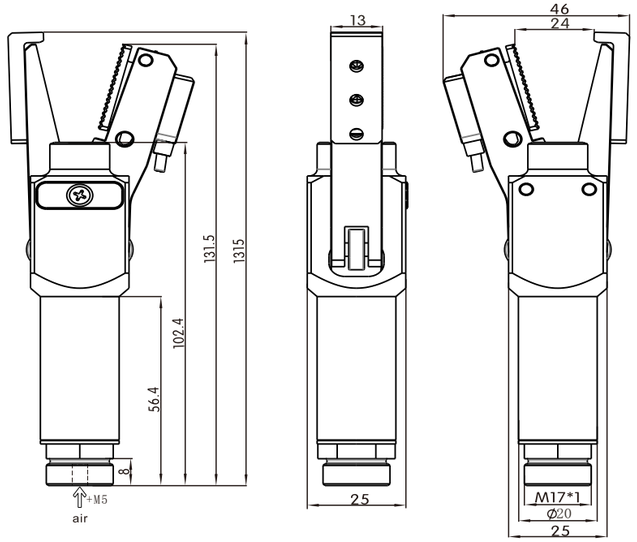

Sprue Gripper

PN	0241859
Model	ESA.SGT.2016D.CN

- 201g
- 16mm
- 300N
- 3 NPN
- GX-F8A
- 1000mm
- Weight 201g
- Piston bore 16mm
- Steel jaws
- Single acting
- Grip:300N
- Sensor direct current three-wire system NPN
- Sensor Model GX-F8A
- Harness length 1000mm

Sprue Gripper

PN	0243088
Model	ESA.SGT.2016D.CP

- 201g
- 16mm
- 300N
- 3 PNP
- GX-F8A-P
- 1000mm
- Weight 201g
- Piston bore 16mm
- Steel jaws
- Single acting
- Grip:300N
- Sensor direct current three-wire system PNP
- Sensor Model GX-F8A-P
- Harness length 1000mm



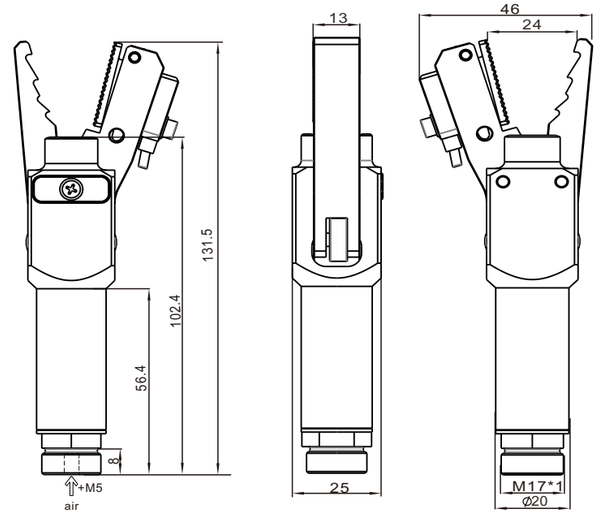

Sprue Gripper

PN	0246942
Model	ESA.SGT.2016F.CN

- 191g
- 16mm
- 300N
- 3 NPN
- GX-F8A
- 1000mm
- Weight 191g
- Piston bore 16mm
- Steel jaws
- Single acting
- Grip:300N
- Sensor direct current three-wire system NPN
- Sensor Model GX-F8A
- Harness length 1000mm

Sprue Gripper

PN	0243936
Model	ESA.SGT.2016F.CP

- 191g
- 16mm
- 300N
- 3 PNP
- GX-F8A-P
- 1000mm
- Weight 191g
- Piston bore 16mm
- Steel jaws
- Single acting
- Grip:300N
- Sensor direct current three-wire system PNP
- Sensor Model GX-F8A-P
- Harness length 1000mm

Sprue Gripper



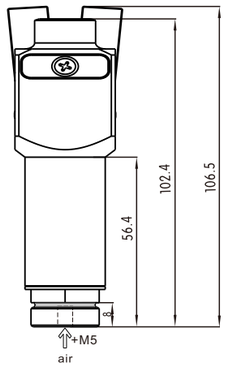

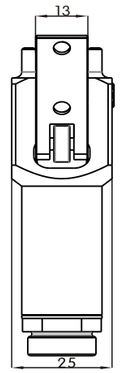

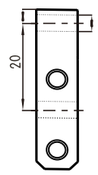

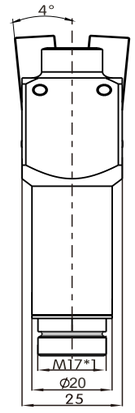

Sprue Gripper

PN	0244158
Model	ESA.SGT.2016E

- 152g
- 16mm
- 300N

- Weight 152g
- Piston bore 16mm
- Steel jaws
- Single acting
- Grip:300N
- Custom jaws

Sprue Gripper



ESA.SGR.2032A



ESA.SGR.2032A.20



ESA.SGR.2032A.3020

Model			
Medium	Filtered&Compressed Air		
Pressure range	2.5~8bar		
Temperature range	5°~60°		
Jaw Strock	2x10°		
Max working Frequency	3HZ		
Cycle Air Consumption	4.5cm³		
Closing gripping torque	375N/cm		
Air Inlet	G1/8		
Weight	625g/668g/668g	1350g/1385g/1385g	1865g/1896g/1896g

Sprue Gripper



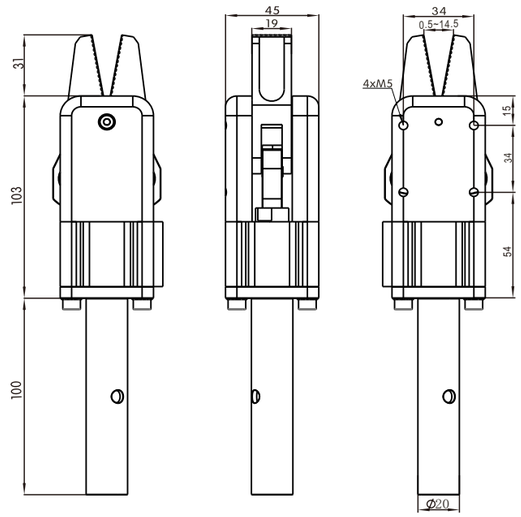

Sprue Gripper

PN	0245825
Model	ESA.SGR.2032A

- 625g
- 32mm
- 375N
- Weight 625g
- Piston bore 32mm
- Steel jaws
- Double acting
- Grip:375N

Sprue Gripper



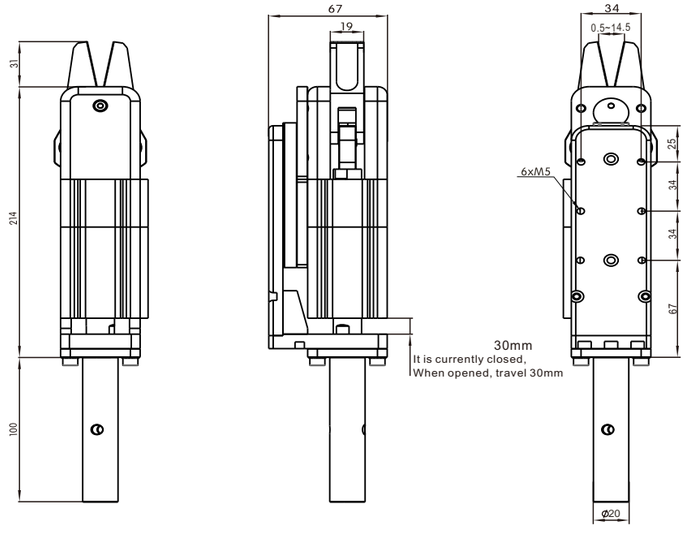

Sprue Gripper

PN	0242806
Model	ESA.SGR.2032A.30

- 1350g
- 32mm
- 375N
- Weight 1350g
- Piston bore 32mm
- Steel jaws
- Double acting
- Grip:375N



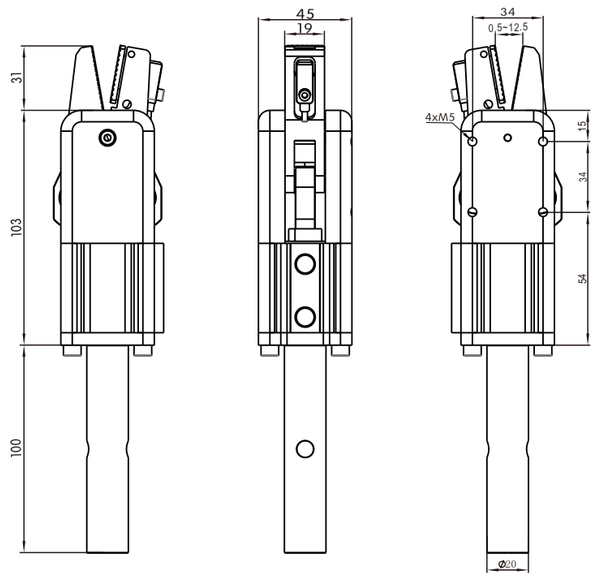

Sprue Gripper

PN	0243416
Model	ESA.SGR.2032A.CN

- 668g
- 32mm
- 375N
- 3 NPN
- GX-F8A
- 1000mm
- Weight 668g
- Piston bore 32mm
- Steel jaws
- Double acting
- Grip:375N
- Sensor direct current three-wire system NPN
- Sensor Model GX-F8A
- Harness length 1000mm

Sprue Gripper

PN	0245249
Model	ESA.SGR.2032A.CP

- 668g
- 32mm
- 375N
- 3 PNP
- GX-F8A-P
- 1000mm
- Weight 668g
- Piston bore 32mm
- Steel jaws
- Double acting
- Grip:375N
- Sensor direct current three-wire system PNP
- Sensor Model GX-F8A-P
- Harness length 1000mm



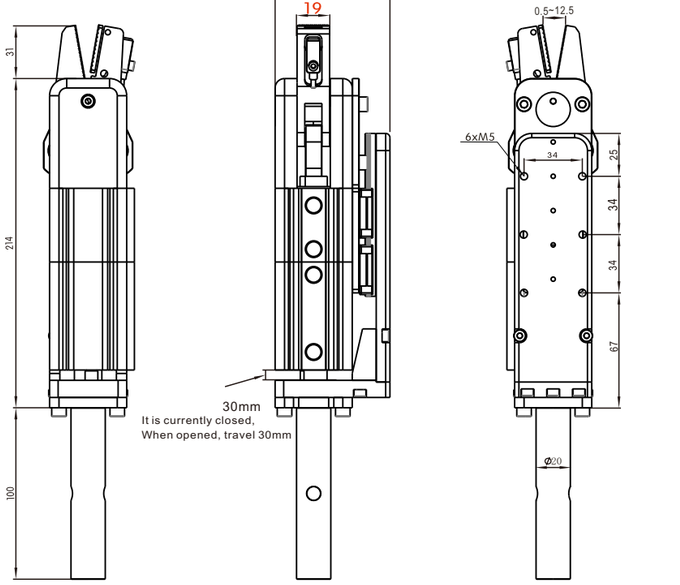

Sprue Gripper

PN	0240342
Model	ESA.SGR.2032A.30.CN

- 1385g
- 32mm
- 375N
- 3 NPN
- GX-F8A
- 1000mm
- Weight 1385g
- Piston bore 32mm
- Steel jaws
- Double acting
- Grip:375N
- Sensor direct current three-wire system NPN
- Sensor Model GX-F8A
- Harness length 1000mm

Sprue Gripper

PN	0248988
Model	ESA.SGR.2032A.30.CP

- 1385g
- 32mm
- 270N
- 3 PNP
- GX-F8A-P
- 1000mm
- Weight 1385g
- Piston bore 32mm
- Aluminum jaws
- Double acting
- Grip:270N
- Sensor direct current three-wire system PNP
- Sensor Model GX-F8A-P
- Harness length 1000mm

Sprue Gripper



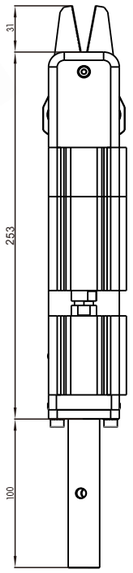

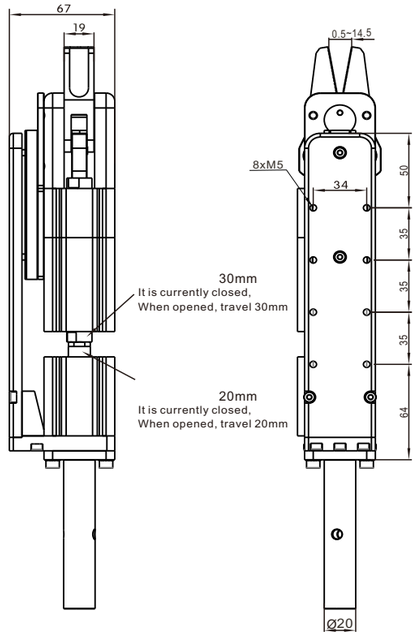

Sprue Gripper

PN	0244680
Model	ESA.SGR.2032A.3020

- 1865g
- 32mm
- 375N
- Weight 1865g
- Piston bore 32mm
- Steel jaws
- Double acting
- Grip:375N



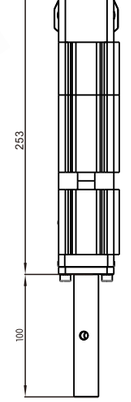

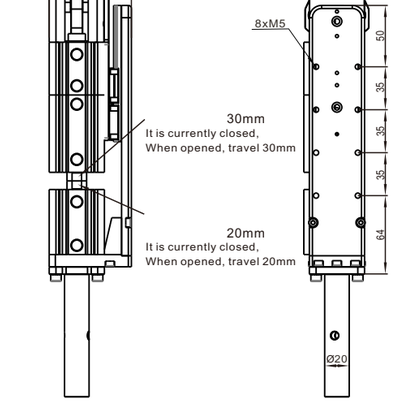

Sprue Gripper

PN	0245884
Model	ESA.SGR.2032A.3020.CN

- 1865g
- 32mm
- 375N
- 3 NPN
- GX-F8A
- 1000mm
- Weight 1865g
- Piston bore 32mm
- Steel jaws
- Double acting
- Grip:375N
- Sensor direct current three-wire system NPN
- Sensor Model GX-F8A
- Harness length 1000mm

Sprue Gripper

PN	0241369
Model	ESA.SGR.2032A.3020.CP

- 1896g
- 32mm
- 375N
- 3 PNP
- GX-F8A-P
- 1000mm
- Weight 1896g
- Piston bore 32mm
- Steel jaws
- Doubleacting
- Grip:375N
- Sensor direct current three-wire system PNP
- Sensor Model GX-F8A-P
- Harness length 1000mm

Sprue Gripper



ESA.SGS.2545A



ESA.SGS.2545A.CN
ESA.SGS.2545A.CP



ESA.SGS.2545B.CN
ESA.SGS.2545B.CP

Model		
Medium	Filtered&Compressed Air	
Pressure range	2.5~8bar	
Temperature range	5°~60°	
Jaw Strock	2x20°	
Max working Frequency	2HZ	
Cycle Air Consumption	5cm³	
Closing gripping torque	300N/cm	
Air Inlet	M5	
Weight	115g/120g/120g	140g/140g

Sprue Gripper



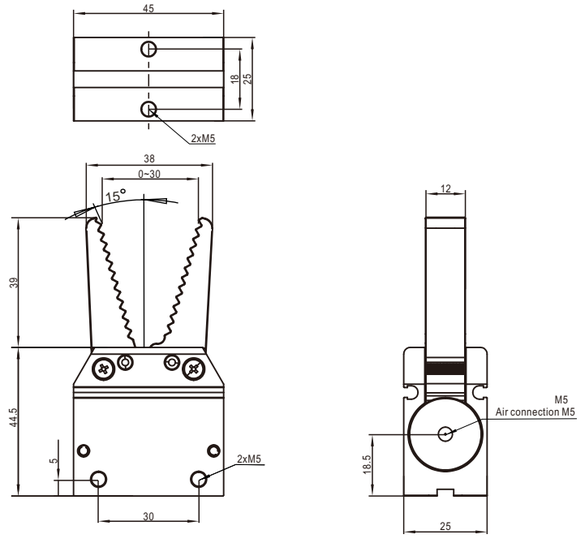

Sprue Gripper

PN	0241999
Model	ESA.SGS.2545A

- 115g
- 16mm
- 300N
- Weight 115g
- Piston bore 16mm
- Aluminum jaws
- Single acting
- Grip:300N



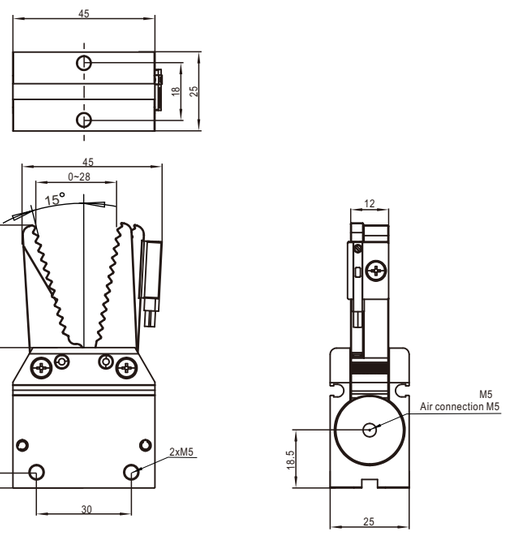

Sprue Gripper

PN	0245724
Model	ESA.SGS.2545A.CN

- 120g
- 16mm
- 300N
- 3 NPN
- D-M9N
- 3000mm
- Weight 120g
- Piston bore 16mm
- Aluminum jaws
- Single acting
- Grip:300N
- Sensor direct current three-wire system NPN
- Sensor Model D-M9N
- Harness length 3000mm

Sprue Gripper

PN	0247080
Model	ESA.SGS.2545A.CP

- 120g
- 16mm
- 270N
- 3 PNP
- D-M9P
- 3000mm
- Weight 120g
- Piston bore 16mm
- Aluminum jaws
- Single acting
- Grip:270N
- Sensor direct current three-wire system PNP
- Sensor Model D-M9P
- Harness length 3000mm

Sprue Gripper



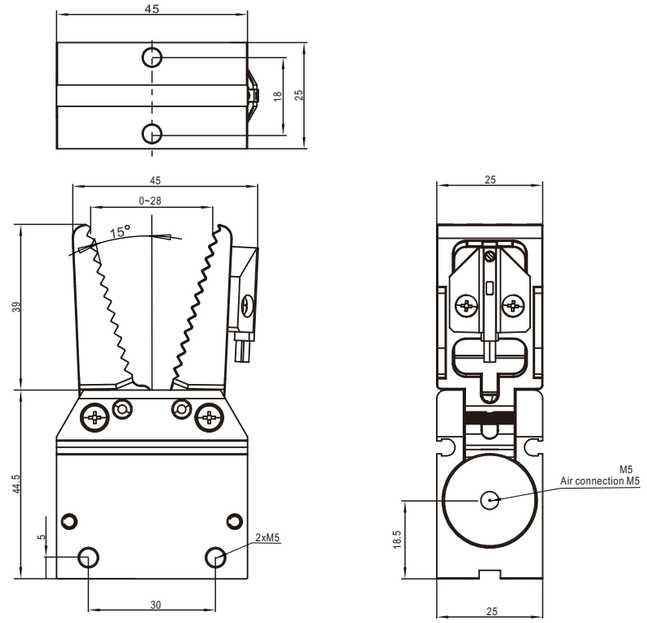

Sprue Gripper

PN	0247296
Model	ESA.SGS.2545B.CN

- 140g
- 16mm
- 300N
- 3 NPN
- D-M9N
- 3000mm
- Weight 140g
- Piston bore 16mm
- Aluminum jaws
- Single acting
- Grip:300N
- Sensor direct current three-wire system NPN
- Sensor Model D-M9N
- Harness length 3000mm

Sprue Gripper

PN	0248177
Model	ESA.SGS.2545B.CP

- 140g
- 16mm
- 270N
- 3 PNP
- D-M9P
- 3000mm
- Weight 140g
- Piston bore 16mm
- Aluminum jaws
- Single acting
- Grip:270N
- Sensor direct current three-wire system PNP
- Sensor Model D-M9P
- Harness length 3000mm

Finger Gripper

One finger angular pneumatic grippers for clamping

- Single acting.
- Optional magnetic sensors.
- Food grade grease .

ium	Filtered&Compressed Air		
Gripper body	Aluminium		
Pressure range	2.5 ÷ 8 bar		
Temperature range	5 ÷ 60 °C.		
Stroke	35°		
Piston bore	Ø10 mm	Ø16 mm	Ø25 mm
6 bar Closing torque at 6 bar	26 Ncm	100 Ncm	430 Ncm
Cycle air consumption	0.4 cm^3	1.24 cm^3	4.56 cm^3
Weight	25 g	86 g	206 g





ium	Filtered&Compressed Air		
Gripper body	Aluminium		
Pressure range	2.5 ÷ 8 bar		
Temperature range	5 ÷ 60 °C.		
Stroke	90°		
Piston bore	Ø10 mm	Ø16 mm	Ø25 mm
6 bar Closing torque at 6 bar	19 Ncm	70 Ncm	300 Ncm
Cycle air consumption	1 cm^3	3.52 cm^3	12.9 cm^3
Weight	23 g	60 g	185 g



Finger Gripper

One finger angular pneumatic grippers for clamping

- Single acting.
- Optional magnetic sensors.
- Food grade grease .

ium	Filtered&Compressed Air		
Gripper body	Aluminium		
Pressure range	2.5 ÷ 8 bar		
Temperature range	5 ÷ 60 °C.		
Stroke	95°		
Piston bore	Ø10 mm	Ø16 mm	Ø25 mm
6 bar Closing torque at 6 bar	26 Ncm	100 Ncm	430 Ncm
Cycle air consumption	1 cm^3	3.52 cm^3	12.9 cm^3
Weight	25 g	60 g	193 g





ium	Filtered&Compressed Air		
Gripper body	Aluminium		
Pressure range	2.5 ÷ 8 bar		
Temperature range	5 ÷ 60 °C.		
Stroke	95°		
Piston bore	Ø10 mm	Ø16 mm	Ø25 mm
6 bar Closing torque at 6 bar	26 Ncm	100 Ncm	430 Ncm
Cycle air consumption	0.4 cm^3	1.24 cm^3	4.56 cm^3
Weight	25 g	86 g	206 g





Finger Gripper

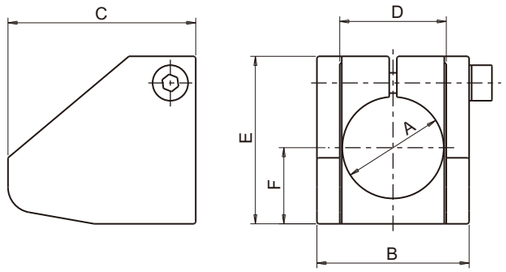

Gripper guide

(kit with screws)

Model	ESA.FGG.0120	ESA.FGG.0130
PN	0247057	0249495
A [mm]	Ø20	Ø30
B [mm]	30	45
C [mm]	37	65
D [mm]	21	32
E [mm]	33	44
F [mm]	15	20
Weight	20 g	60 g

(ESA.FGB

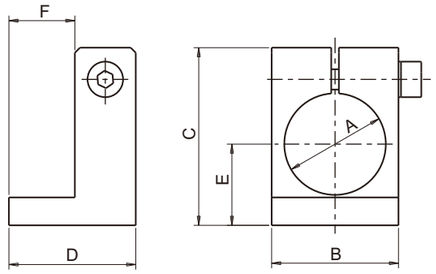

Stopper for ESA.FGB grippers

(kit with screws)

Model	ESA.FGG.0214	ESA.FGG.0220	ESA.FGG.0230
PN	0249555	0246633	0245501
A [mm]	Ø14	Ø20	Ø30
B [mm]	19	25	35
C [mm]	24	40	45
D [mm]	12	25	25
E [mm]	11	16	21
F [mm]	6	13	13
Weight	5 g	14 g	23 g

(ESA.FGR

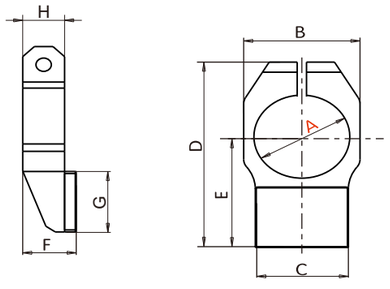

Stopper for ESA.FGR grippers

(kit with screws)

Model	ESA.FGG.0314	ESA.FGG.0320	ESA.FGG.0330	ESA.FGG.0314.L	ESA.FGG.0320.L
PN	0242966	0245237	0243798	0243872	0240756
A [mm]	Ø14	Ø20	Ø30	Ø14	Ø20
B [mm]	19	25	37	19	25
C [mm]	14	20	30	14	20
D [mm]	32	43.5	63	47	68.5
E [mm]	19	27.5	40	35	50
F [mm]	8.5	9.5	12	8.5	9.5
G [mm]	11	15	20	11	15
H [mm]	6	7	9	6	7
Weight	6g	12g	30g	15g	25g

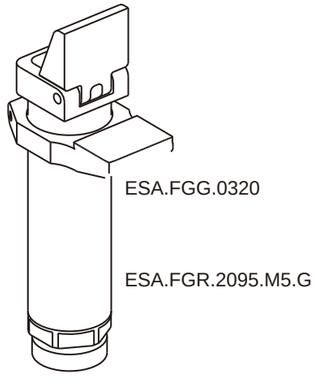

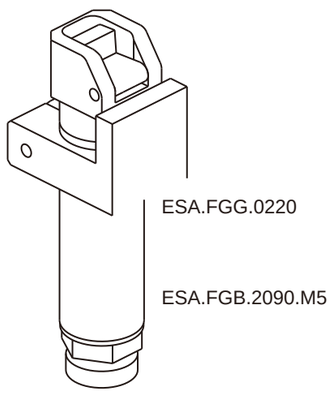

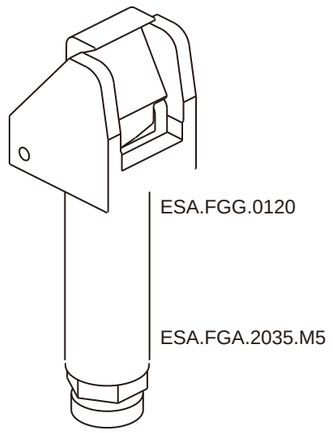

Finger Gripper

Optional magnetic sensors

The operating position is detected by magnetic proximity sensors (optional) through a magnet placed on the piston.
The use of magnetic proximity sensors is to be avoided in the vicinity of large masses of ferromagnetic material or intense magnetic fields as this may cause detection problems.

Optional Magnetic Sensors

D-M9N/D-M9NV

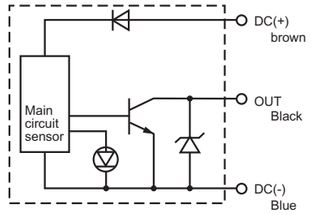

D-M9P/D-M9PV

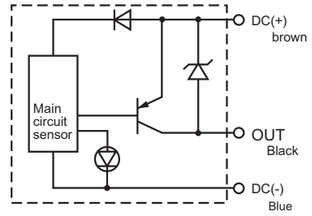



PN	Model	(Type)
0249642	D-M9N	NPN
0241271	D-M9P	PNP
0245659	D-M9NV	NPN
0243657	D-M9PV	PNP
	Sensing range	0-2.5mm



Model	ESA.FGG.0414	ESA.FGG.0420	ESA.FGG.0430
PN	0243419	0247245	0243305
A [mm]	Ø14	Ø20	Ø30
B [mm]	24	34	44
C [mm]	18	23	33
D [mm]	9	9	9
Weight	14 g	18 g	26 g



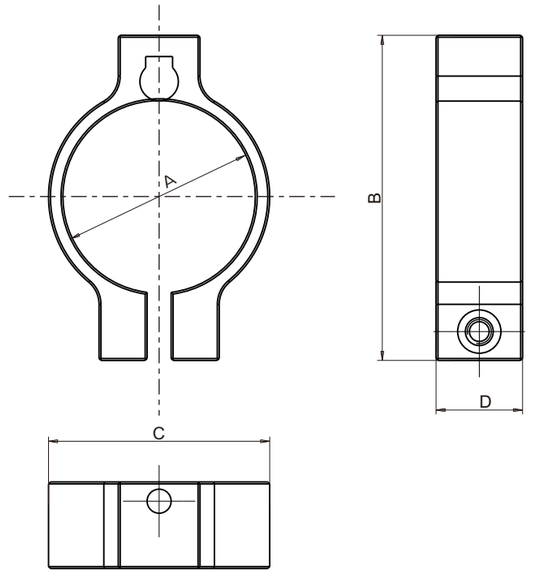

Finger Gripper

Model	ESA.FGG.0514	ESA.FGG.0520
PN	0248063	0246812
A [mm]	Ø14	Ø20
B [mm]	24	46
C [mm]	19	25
D [mm]	14	20
E [mm]	6	9
F [mm]	13.4	17.8
Weight	18 g	27 g
Sensor	D-F8N D-F8P	

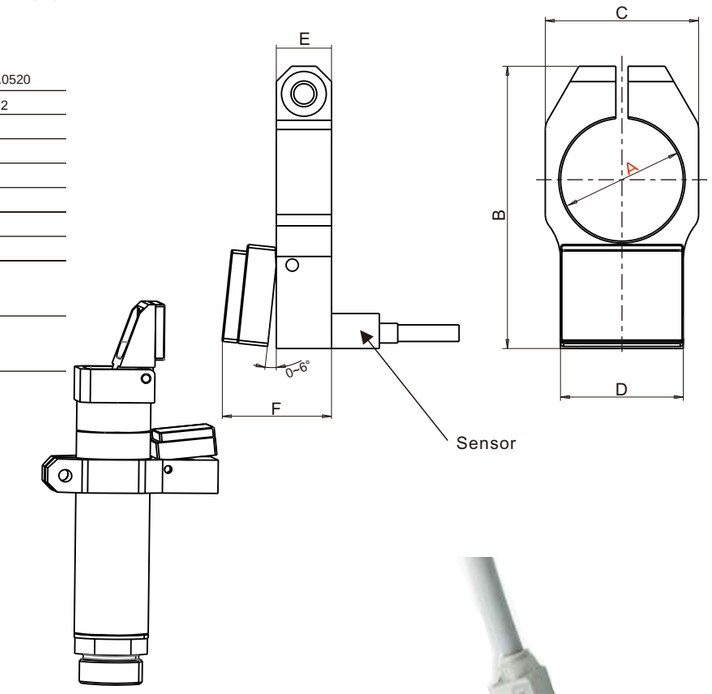

Application example



D-F8N

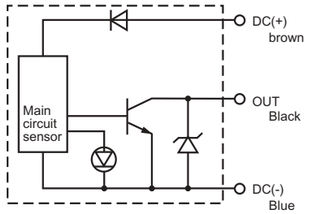

D-F8P

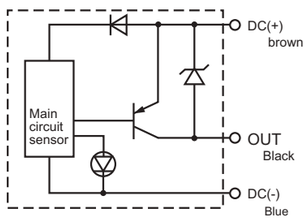

PN	Model	(Type)
0249099	D-F8N	NPN
0245839	D-F8P	PNP
	Sensing range	0-2.5mm



silicone pad

PN	0249045
Model	ESA.FSP.14
Compatible with:	ESA.FGR.1495.M5 ESA.FGR.1495.M5.G ESA.FGR.1495.M5.LG
1g	Weight 1g
	Material silicone



silicone pad

PN	0248224
Model	ESA.FSP.20
Compatible with:	ESA.FGR.2095.M5 ESA.FGR.2095.M5.G ESA.FGR.2095.M5.LG ESA.FGR.2095.M5.S ESA.FGR.2095.M5.SG ESA.FGR.2095.M5.SLG
2g	Weight 2g
	Material silicone



silicone pad

PN	0243668
Model	ESA.FSP.30
Compatible with:	ESA.FGR.3095.G18 ESA.FGR.3095.G18.G ESA.FGP.2016.M5
3g	Weight 3g
	Material silicone

Finger Gripper



Model	ESA.FGA.1435.M5	ESA.FGA.2035.M5	ESA.FGA.2035.M5.W	ESA.FGA.3035.G18
PN	0242349	0248461	0244386	0248201
A	74	106	94	153
B	44	68.5	68.5	100
C	40	63.5	63.5	92
D	14	20.5	8.5	30
E	16	23	17.5	34
F	5.5	8	8	11
G	4.5	6	3.4	8
H	Ø14	Ø20	Ø20	Ø30
J	14	20	20	30
K	M12x1	M17x1	M17x1	M27x1
T	M5	M5	M5	G18
CH	12	17	17	27

ESA.FGA.2035.M5.W

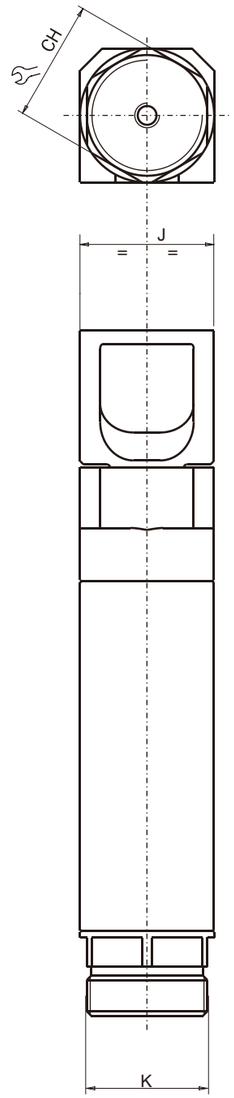

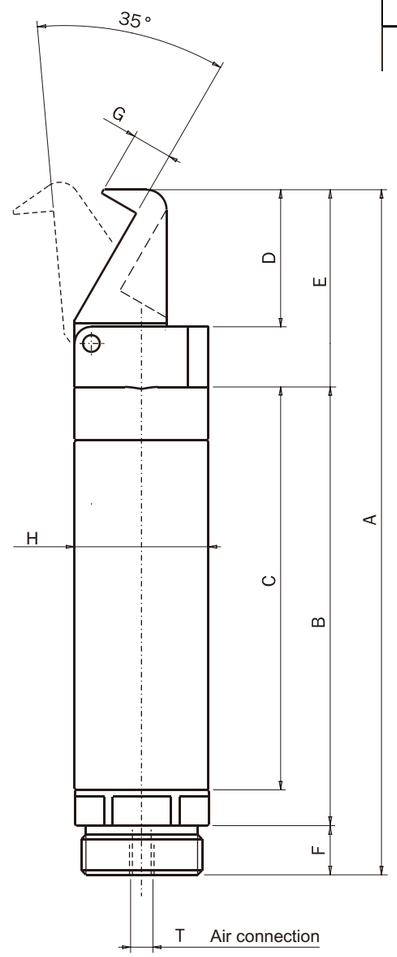

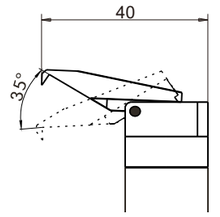

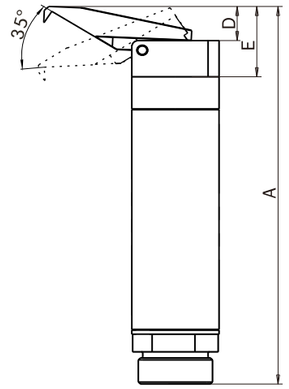



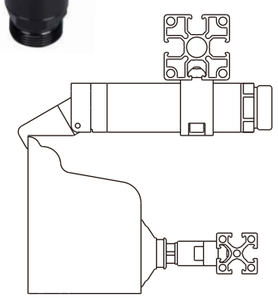

Finger Gripper

PN	Model	A	B	C	D	E	F	G	H	J	K	L	M	N	P	CH
0242163	ESA.FGB.1490.M5	64	45.5	54.5	Ø14	5.5	M5	2°	8	2	9	14	M12x1	4	4	12
0248602	ESA.FGB.2090.M5	91.5	68.5	77.5	Ø20	8	M5	2°	11	2.5	13	20	M17x1	6	5	17
0240209	ESA.FGB.3090.G18	134	100	112	Ø30	11	G18	2°	14	4	20	30	M27x1	11	6	27

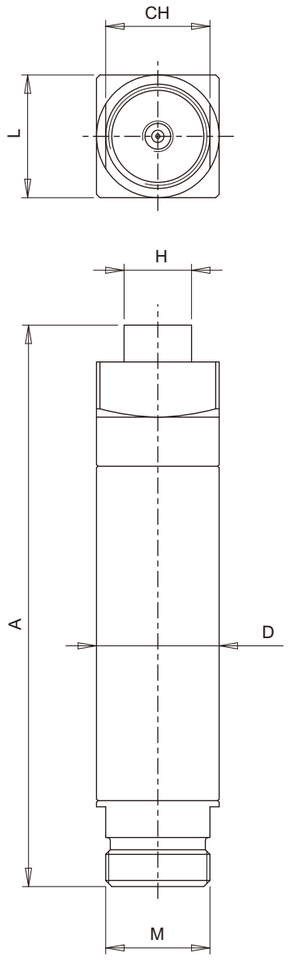

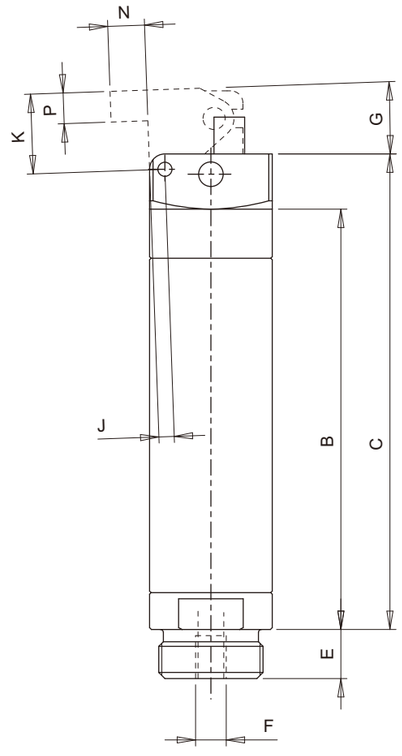

Ingresso aria
Air connection



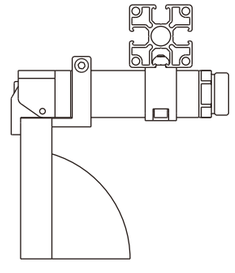

Finger Gripper

PN	Model	A	B	C	D	E	F	G	J	K	L	M	N	O	P	Q	R	CH	T
0246997	ESA.FGR.1495.M5	72	41	40	12	14	5.5	10.5	2	Ø14	14	M12x1	10	2.5	2	11	9	12	M5
0248682	ESA.FGR.2095.M5	103	68.5	62.5	17.5	20	8	9	2.5	Ø20	20	M17x1	14	2.5	3	15	14	17	M5
0244541	ESA.FGR.3095.G18	148	100	92	25	29	11	12	4	Ø30	30	M27x1	22	3	5	20	21	27	G18
0246853	ESA.FGR.2095.M5.S	-	-	-	17.5	20	8	9	2.5	Ø20	20	M17x1	14	2.5	3	15	14	17	M5

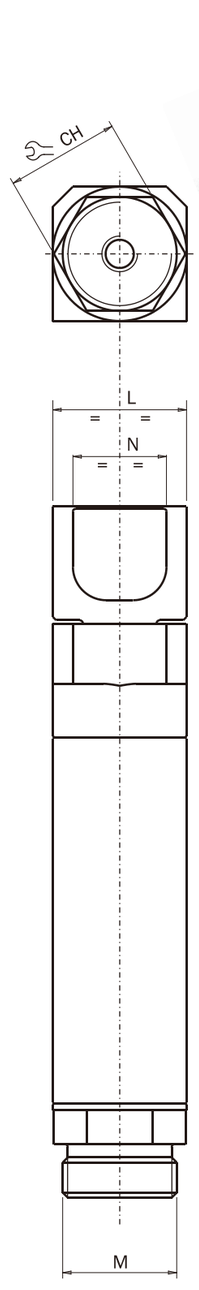

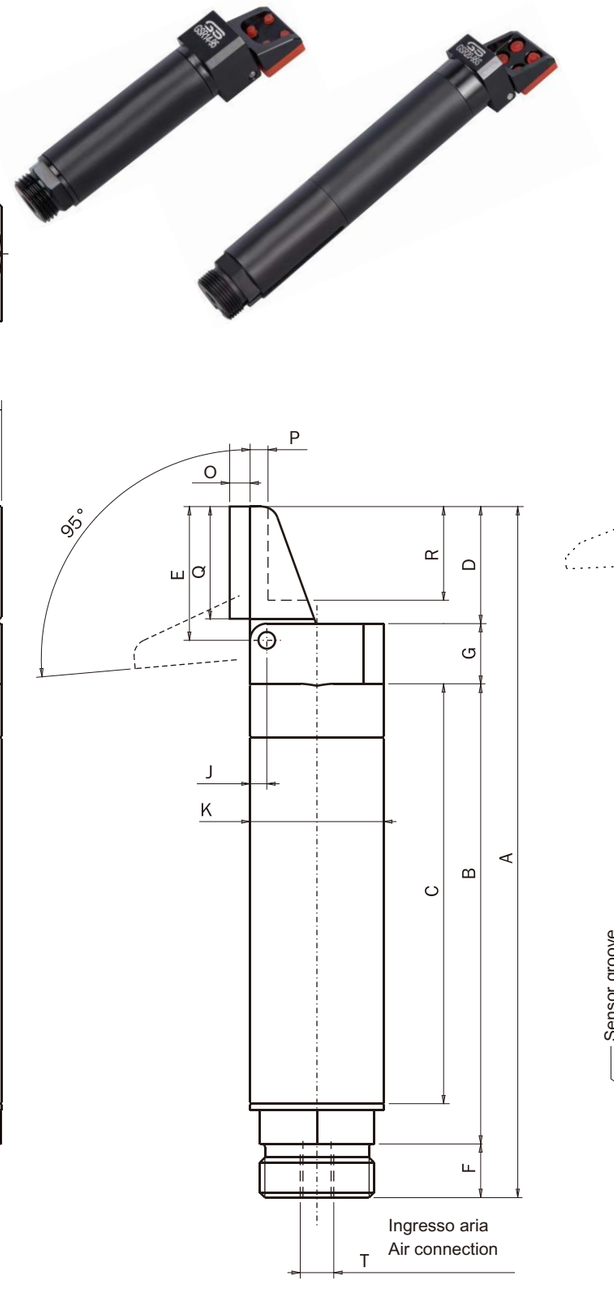

Ingresso aria
Air connection

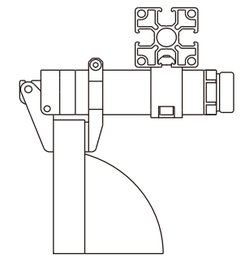

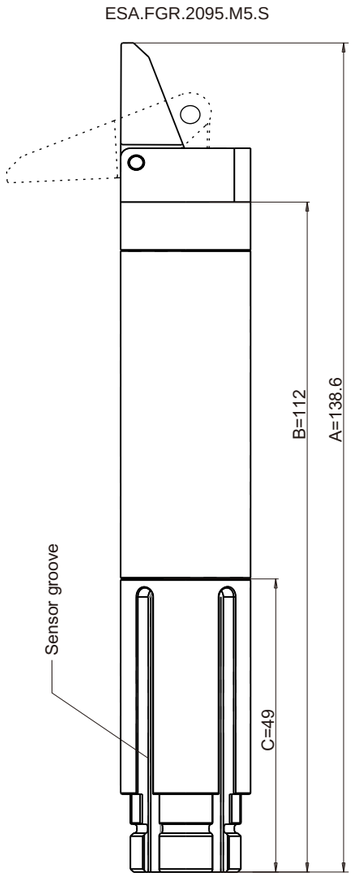

Finger Gripper

PN	Model	A	B	C	D	E	F	G	H	I	L	M	N	O	P	Q	R	S	T
0249245	ESA.FGR.1495.M5.G	Ø14	14	72	9.5	40	10.5	12	5.5	M12x1	2	34	11	M5	7.5	19	19	32	12
0249025	ESA.FGR.2095.M5.G	Ø20	20	103	13	63.5	9	17.5	8	M17x1	2.5	53	15	M5	7	27.5	25	43.5	17
0249036	ESA.FGR.3095.G18.G	Ø30	30	148	19	92	12	25	11	M27x1	4	80	20	G18	9	40	37	63	27



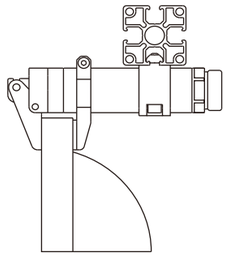

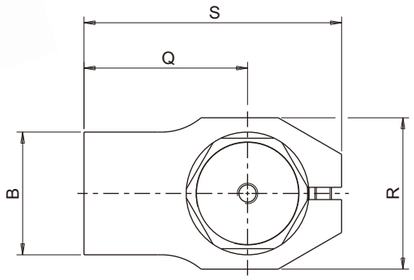

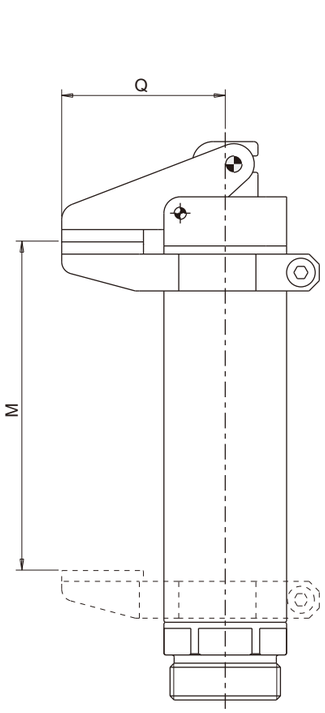

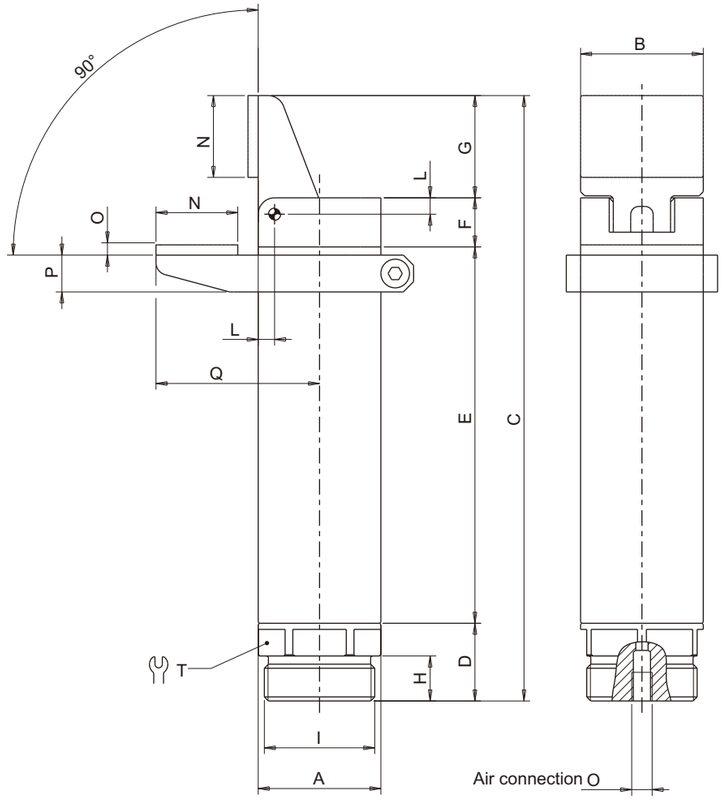

Finger Gripper

PN	Model	A	B	C	D	E	F	G	H	I	L	M	N	O	P	Q	R	S	T
0248697	ESA.FGR.1495.M5.LG	Ø14	14	87	9.5	40	10.5	27	5.5	M12x1	2	34	11	M5	7.5	32	19	32	12
0243866	ESA.FGR.2095.M5.LG	Ø20	20	125.5	13	63.5	9	40	8	M17x1	2.5	53	15	M5	7	48	25	43.5	17





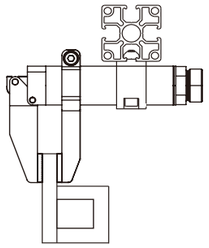

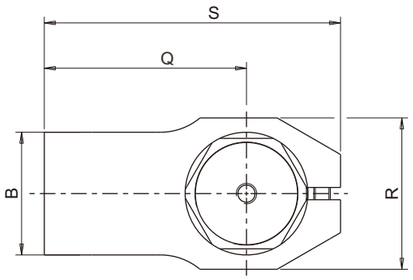

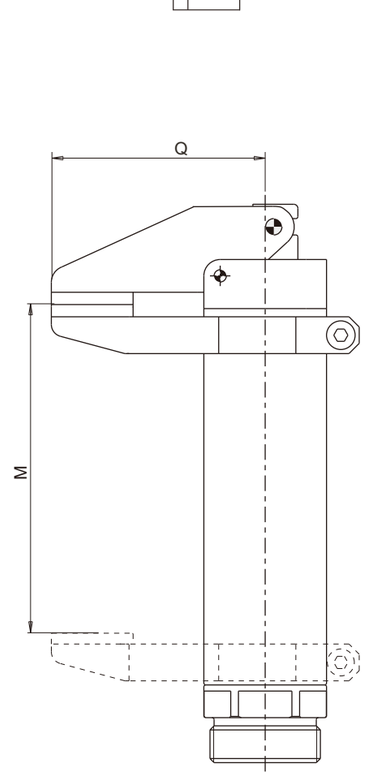

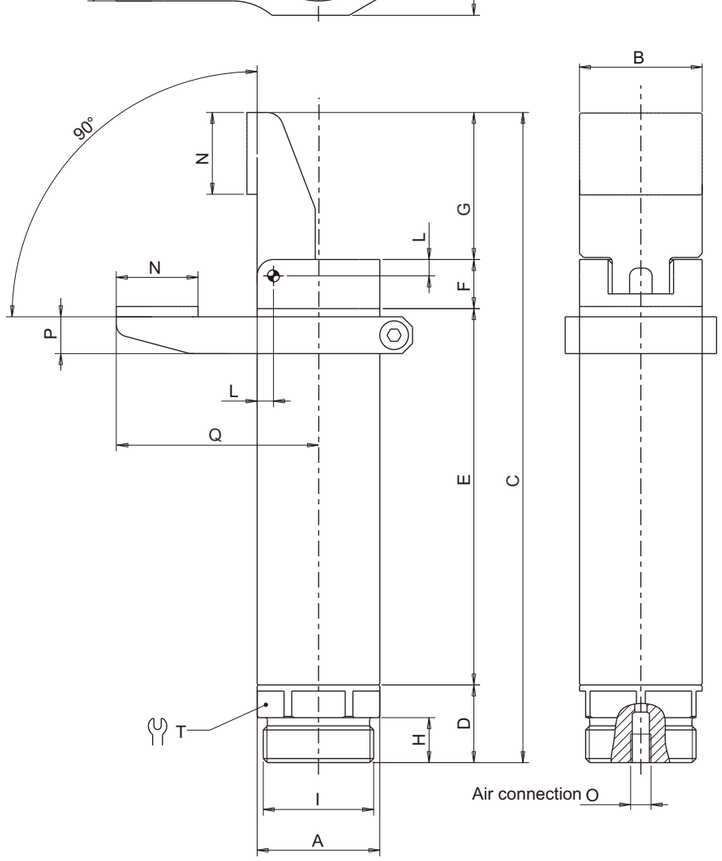

Finger Gripper

PN	Model	A	B	C	D	E	F	G	H	I	L	M	N	O	P	Q	R	S	T
0246245	ESA.FGR.2095.M5.SG	Ø20	20	103	13	63.5	9	17.5	8	M17x1	2.5	73	15	M5	7	27.5	25	43.5	17



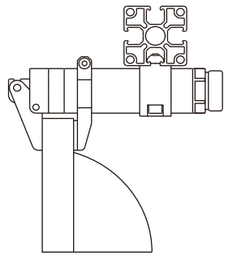

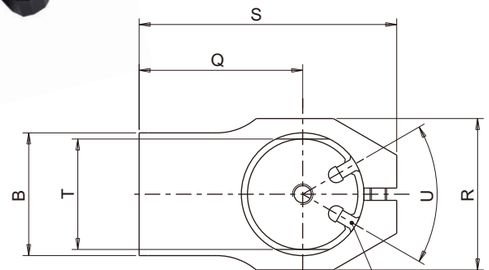

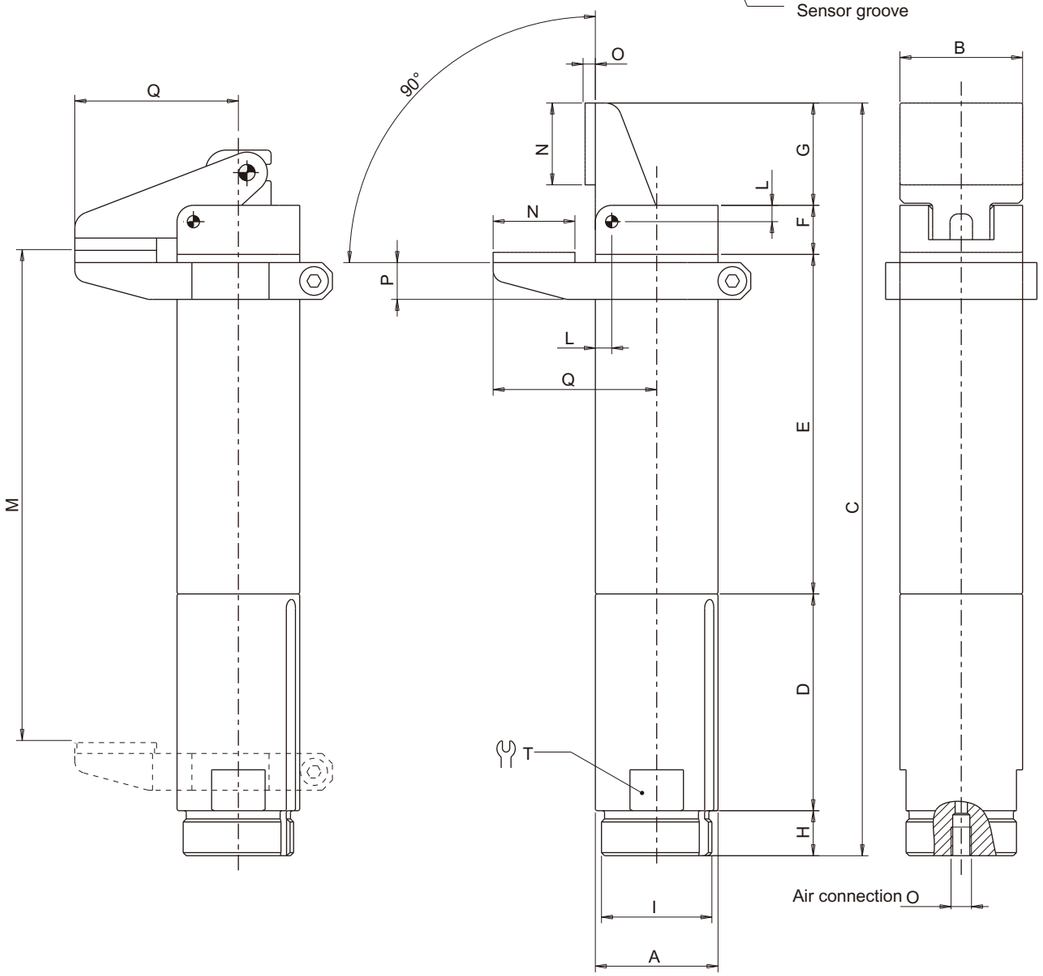

Finger Gripper

PN	Model	A	B	C	D	E	F	G	H	I	L	M	N	O	P	Q	R	S	T
0245280	ESA.FGR.2095.M5.SLG	Ø20	20	148	49	63.5	9	40	8	M17x1	2.5	73	15	M5	7	48	25	43.5	17



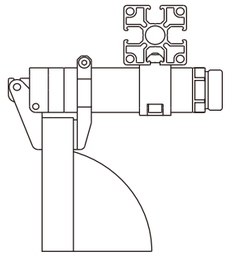

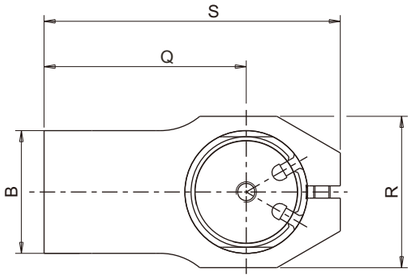

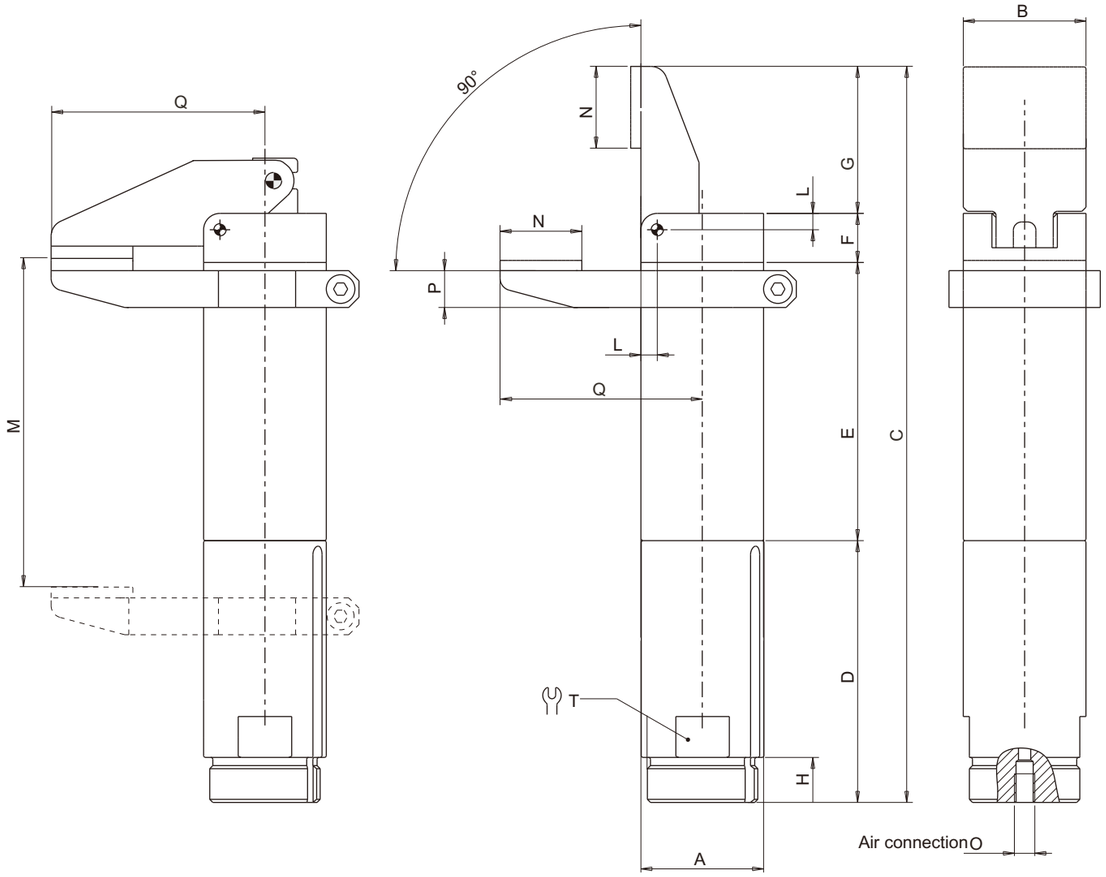

Finger Gripper

One finger angular pneumatic grippers for clamping

- Single acting.
- Optional magnetic sensors.
- Food grade grease .

ium	Filtered&Compressed Air
Gripper body	Aluminium
Pressure range	2.5 ÷ 8 bar
Temperature range	5 ÷ 60 °C.
Stroke	21°
Piston bore	Ø16 mm
6 bar Closing torque at 6 bar	100 Ncm
Cycle air consumption	3.52 cm^3
Weight	37 g



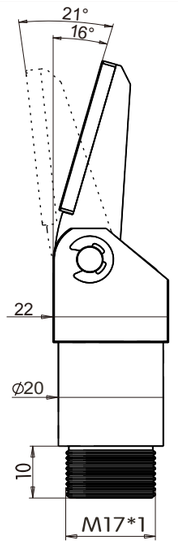

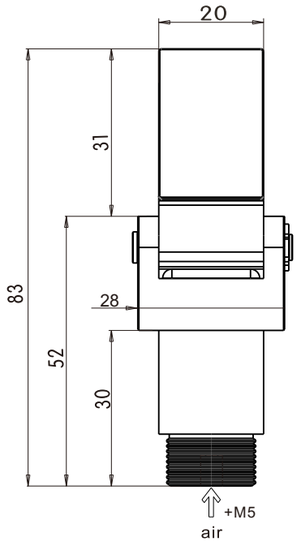

Application example

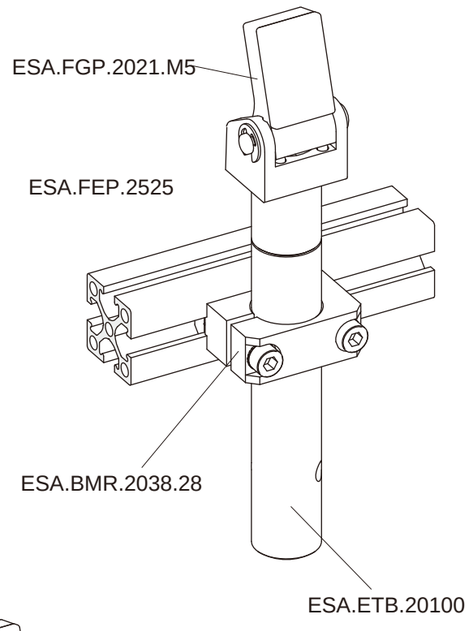

ESA.FEP.2525

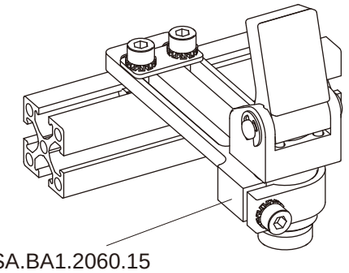

ESA.FGP.2021.M5

Pneumatic tilt unit for EOATs

- 90° rotation.
- Single-acting operation
- Optional magnetic sensors.

ium	Filtered&Compressed Air	
Gripper body	Aluminium	
Pressure range	2.5 ÷ 8 bar	
Temperature range	5 ÷ 60 °C.	
Stroke	90°	
Piston bore	Ø16 mm	Ø25 mm
6 bar Closing torque at 6 bar	70 Ncm	300 Ncm
Cycle air consumption	3.52 cm^3	12.9 cm^3
Weight	75 g	210 g



FIRST ANGLE PROJECTION

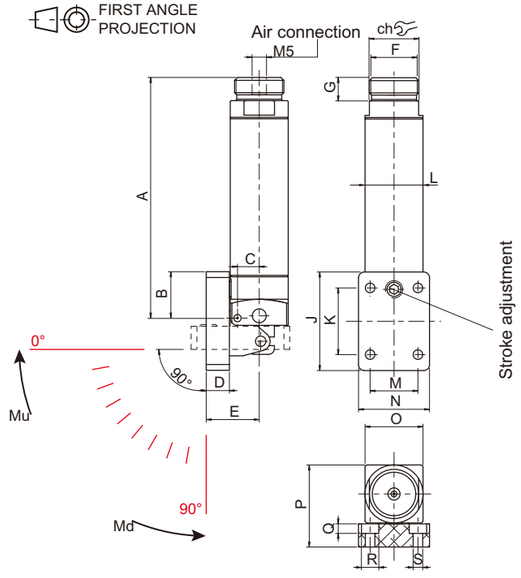

Model	ESA.FGN.2090.M5	ESA.FGN.3090.G18
PN	0247743	0249752
A	83	119
B	16	18.5
C	7.5	11
D	8	10
E	18.3	25.3
F	M17x1	M27x1
G	8	11
J	34	46
K	23	25
L	20	30
M	16.5	25
N	24.5	37
O	20	30
P	28.3	40.3
Q	3.3	5.3
R	6	10
S	3.3	5.3
⌀	17	27
T	M5	G18

Application example

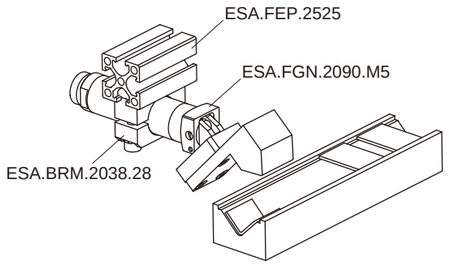

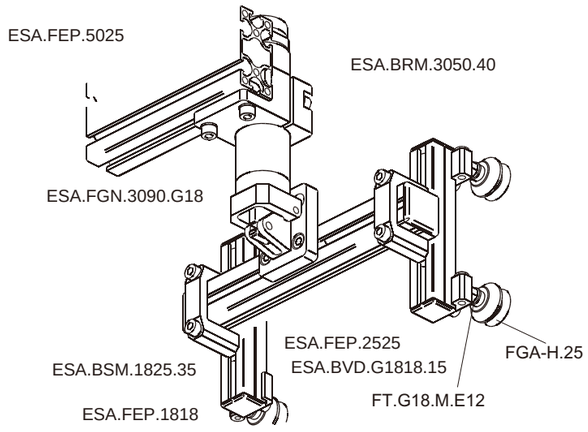

Pneumatic tilt unit for EOATs

S.FGN.3844.30.

- 90° rotation .
- Two rubber adjustable end strokes .
- High lifting torque .
- Safety lock , except ESA.FGN.3844.30
- Optional magnetic sensors .

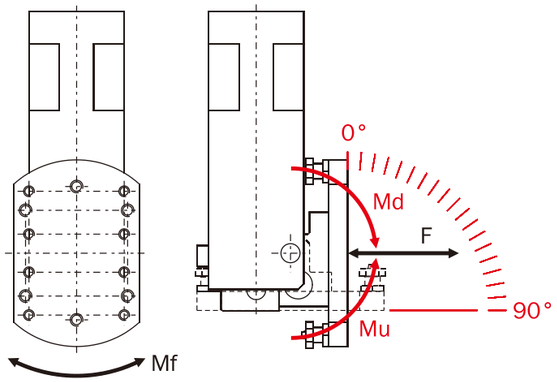



ium	Filtered&Compressed Air				
Pressure range	2.5 ÷ 8 bar				
Unlock pressure	> 3.5 bar				
Temperature range	5 ÷ 60 °C.				
Stroke	90°				
End stroke adjustment	±2°				
Piston bore	Ø30 mm	Ø40 mm	Ø50 mm	Ø63 mm	Ø80 mm
Cycle air consumption	56 cm 3	142 cm 3	266 cm 3	462 cm3	983 cm3
Lift torque at 6 bar (Mu) (90°→0°	9Nm	> 24 Nm	> 45 Nm	> 78 Nm	> 174 Nm
Drop torque at 6 bar (Md) (0°→90°	4Nm	> 11 Nm	> 22 Nm	> 42 Nm	> 84 Nm
Allowed load F	50N	100N	200N	300N	600N
Allowed moment Mf	3 Nm	7 Nm	12 Nm	30 Nm	75 Nm
Weight	520 g	1050 g	1600 g	2600 g	6500 g

Pneumatic tilt unit for EOATs

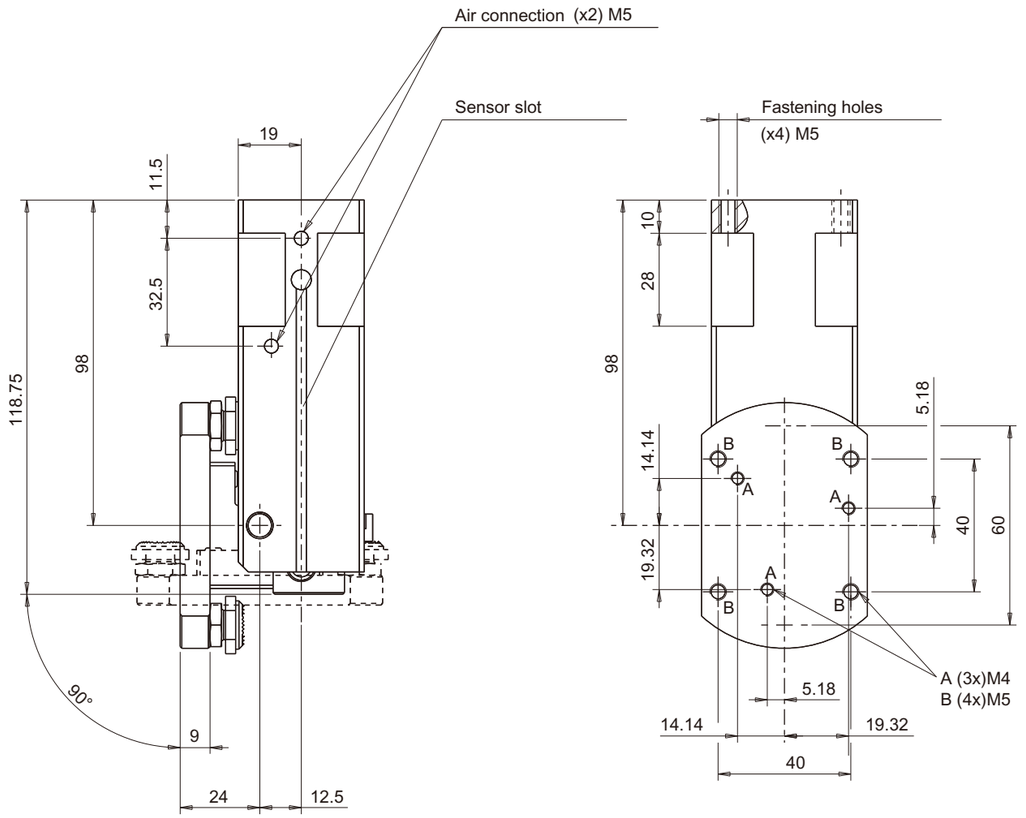

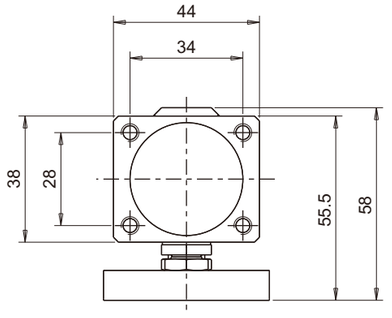

Pneumatic tilt unit	
PN	0241839
Model	ESA.FGN.3844.30

Quick changer
Eoat components
Gripp components
Vacuum components
Fitting
AIR NIPPERS
STATIC SOLUTIONS

Pneumatic tilt unit for EOATs

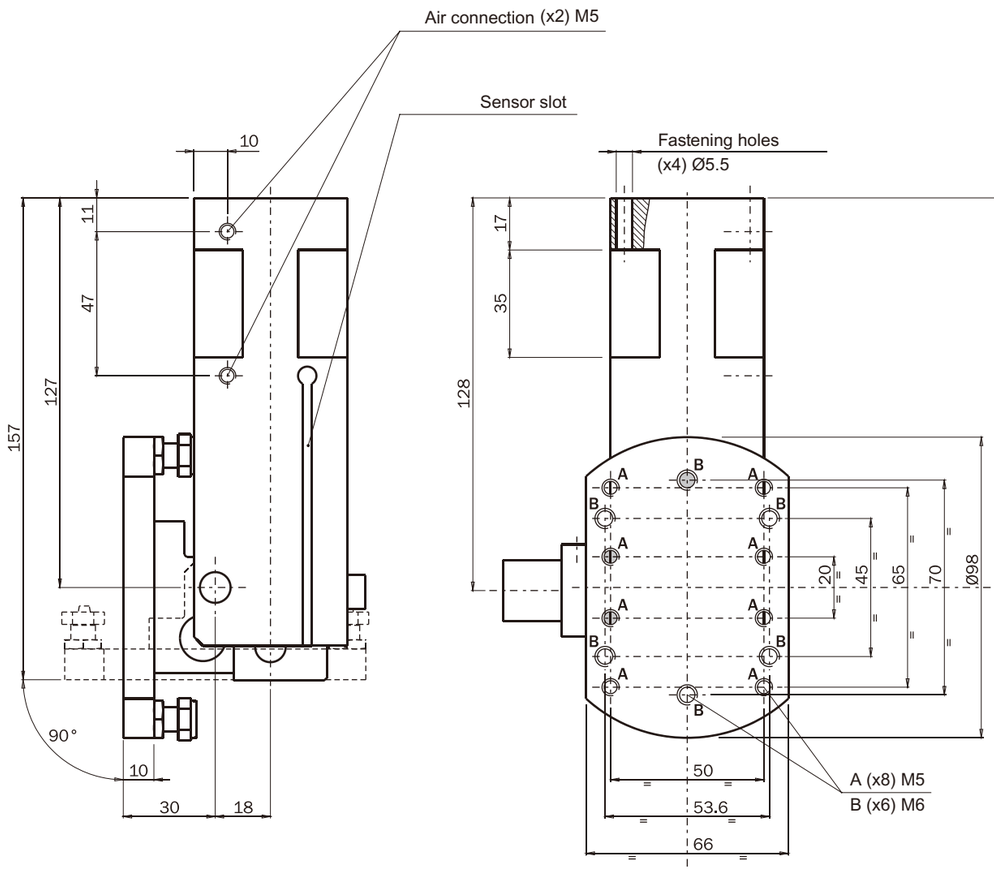

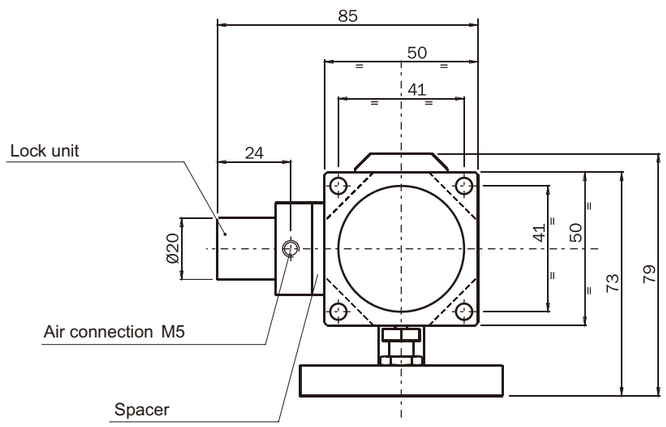

Pneumatic tilt unit

PN	0240609
Model	ESA.FGN.5050.40

Pneumatic tilt unit for EOATs

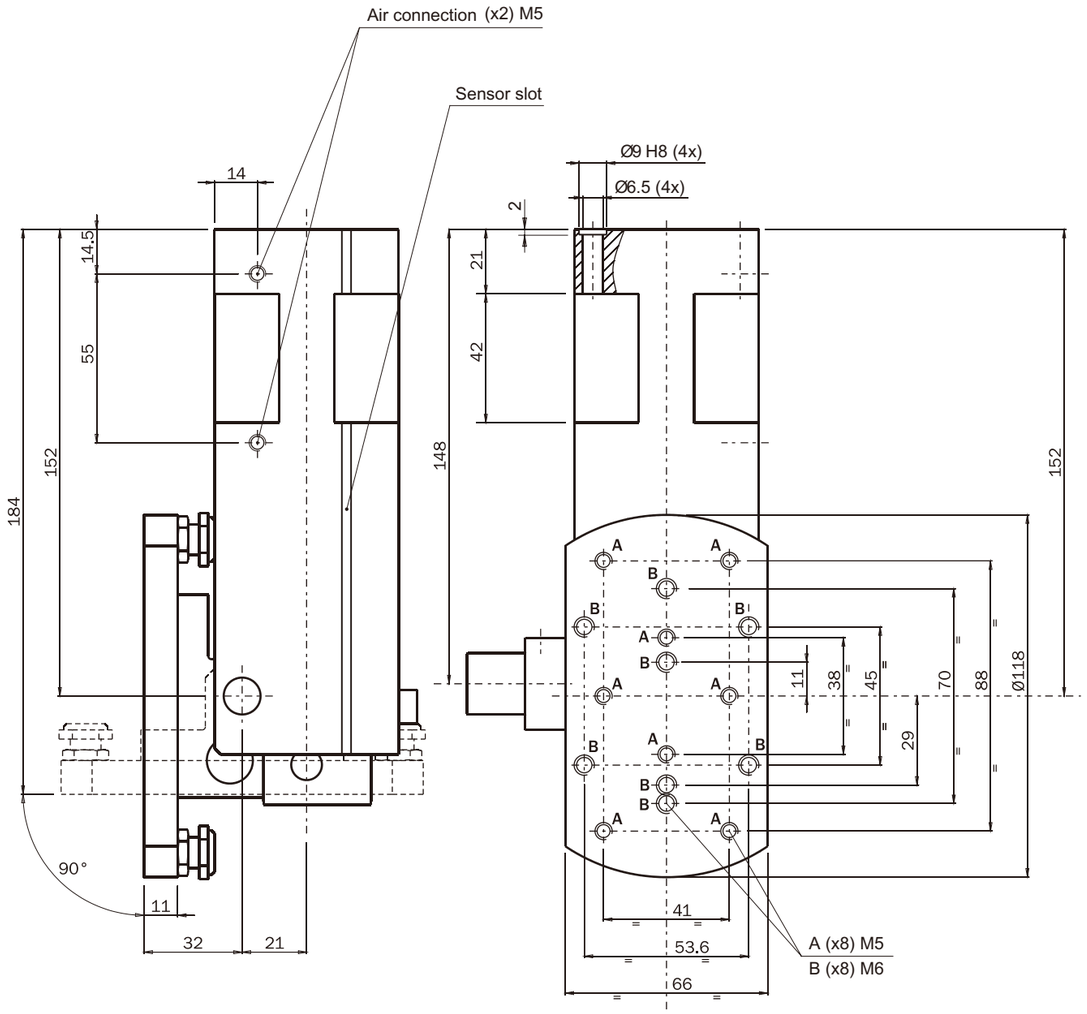

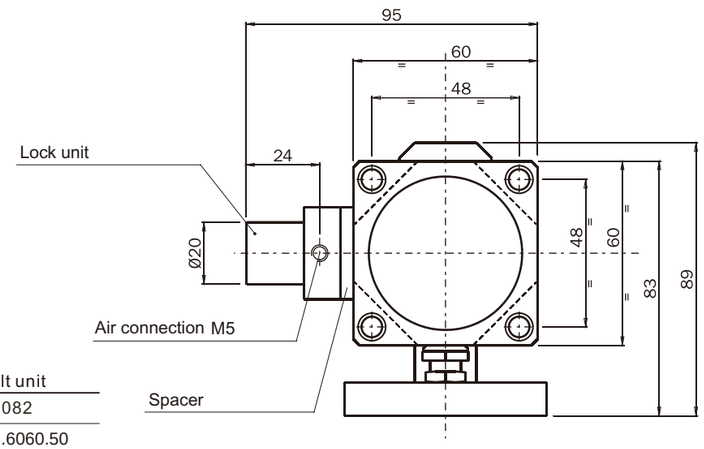

Pneumatic tilt unit

PN	0241082
Model	ESA.FGN.6060.50

Pneumatic tilt unit for EOATs

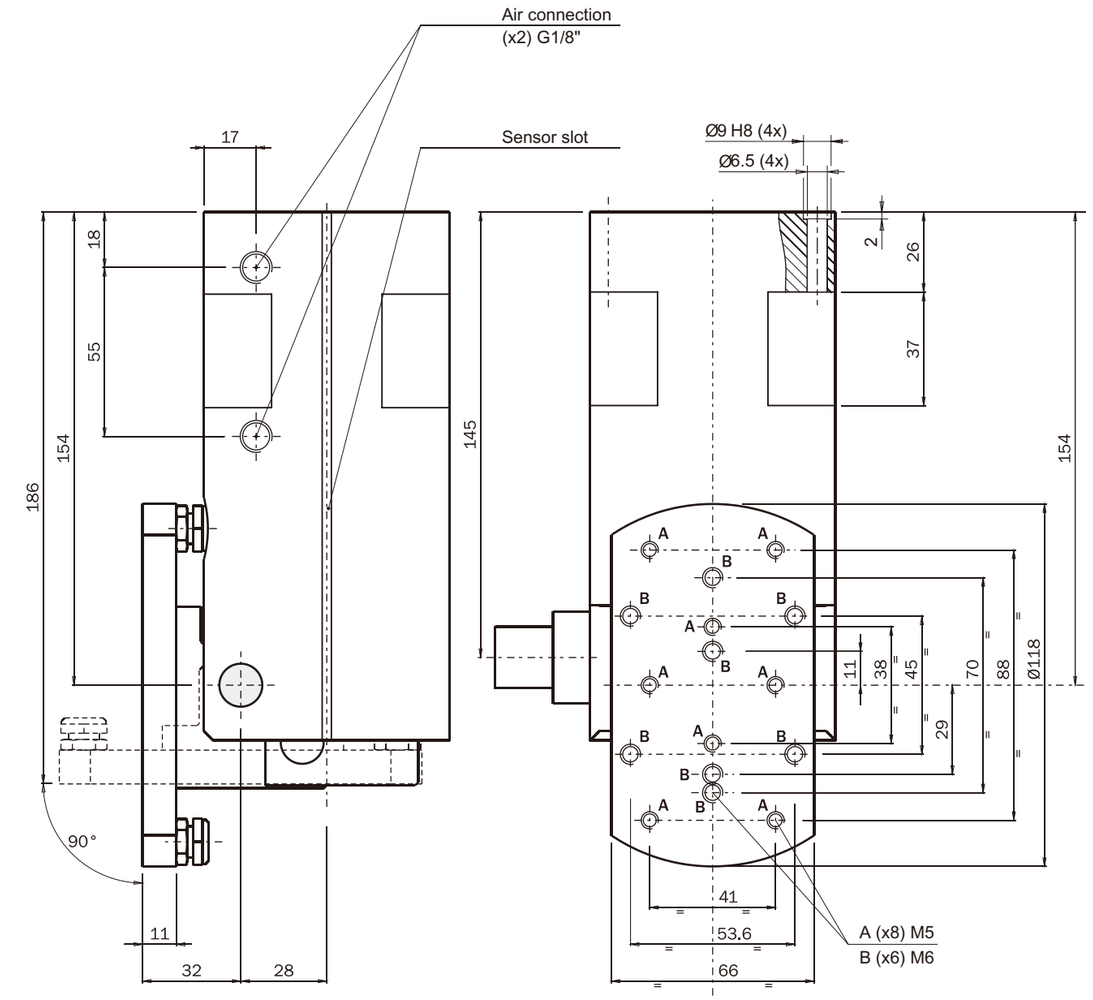

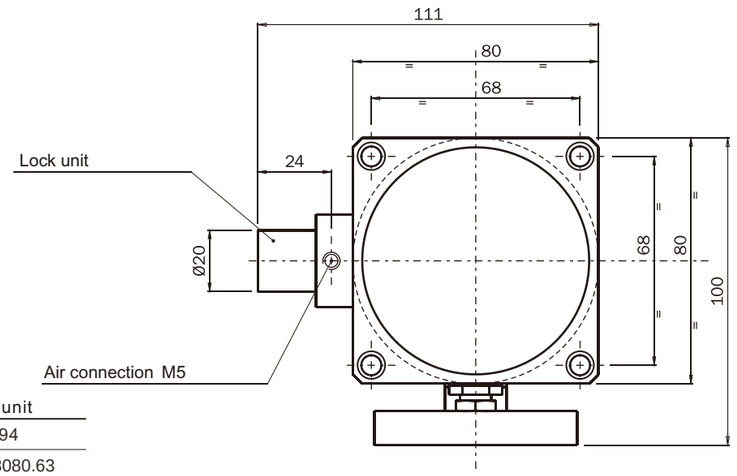

Pneumatic tilt unit	
PN	0243694
Model	ESA.FGN.8080.63

Pneumatic tilt unit for EOATs

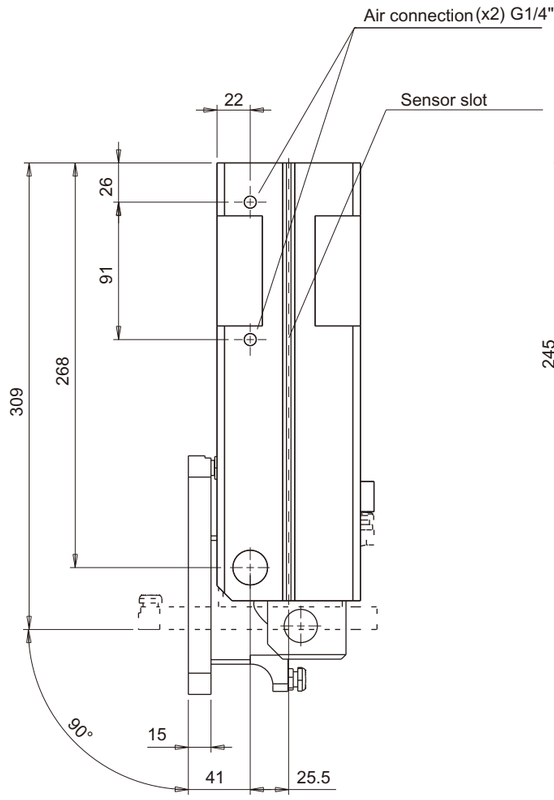

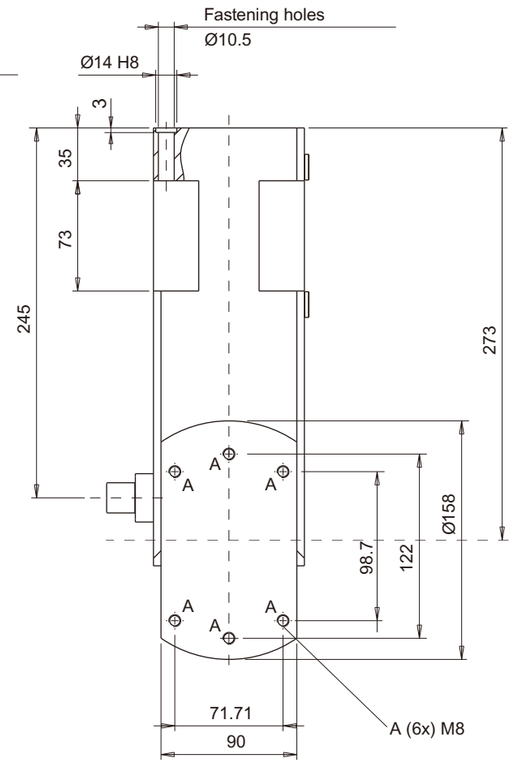

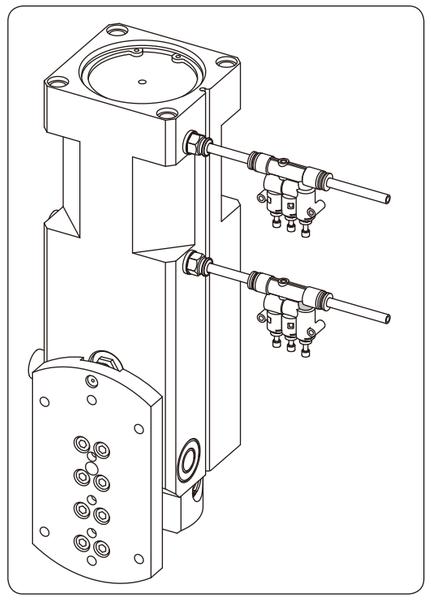

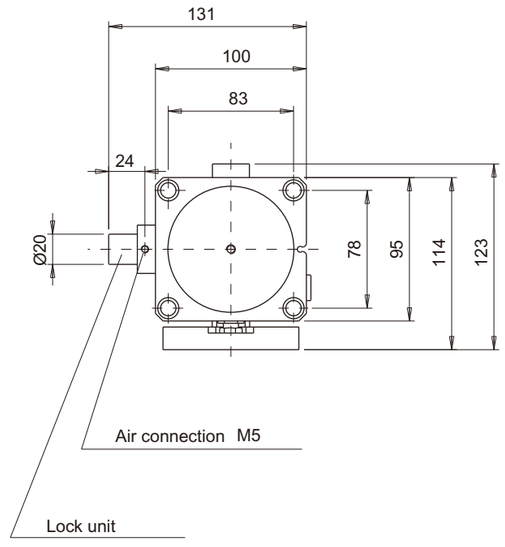

Pneumatic tilt unit	
PN	0240641
Model	ESA.FGN.95100.80

MHZ2

2-jaw parallel self-centering pneumatic gripper

Series:MHZ2

FEATURES

-
-
-
-
- (-NC) or (-NO) .
-

- Double acting.
- Long life and reliability, maintenance free.
- Various options for fastening.
- Optional proximity magnetic sensors.
- Spring closed (-NC) or spring open (-NO) option.
- Food-grade grease.

Action mode	PN.	Model	Medium	Pressure	Temperature	Repetition accuracy	MAX working frequency	Gripping force		Bore	Stoke	Weight	Air inlet
Double action	0247695	MHZ2-10D	compress air	2-7bar	5°-60℃	±0.02mm	2HZ	11N	17N	10	4	55g	M3x0.5
	0249786	MHZ2-16D						34N	45N	16	6	115g	M5x0.8
	0248946	MHZ2-20D						42N	66N	20	10	235g	M5x0.8
	0247046	MHZ2-25D						65N	104N	25	14	430g	M5x0.8
	0240380	MHZ2-32D						158N	193N	32	22	715g	M5x0.8
	0244351	MHZ2-40D						254N	318N	40	30	1275g	M5x0.8
Single action	0249892	MHZ2-10S						7.1N		10	4	55g	M3x0.5
	0242784	MHZ2-16S						27N		16	6	115g	M5x0.8
	0249934	MHZ2-20S						33N		20	10	235g	M5x0.8
	0247879	MHZ2-25S						45N		25	14	430g	M5x0.8
	0245238	MHZ2-32S						131N		32	22	715g	M5x0.8
	0242290	MHZ2-40S						217N		40	30	1275g	M5x0.8





Application example

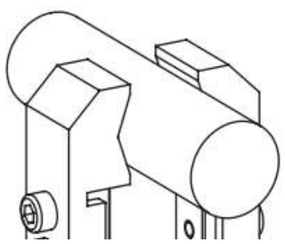

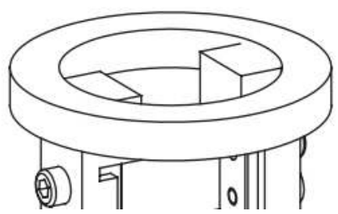

Paraller gripper

MHZ2-10 S/D

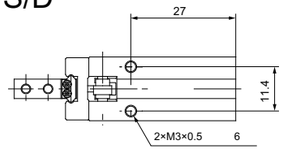

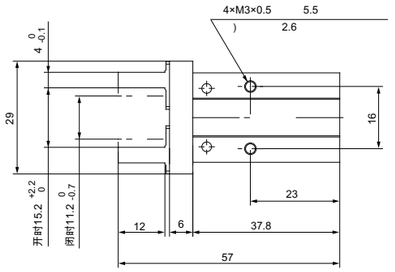

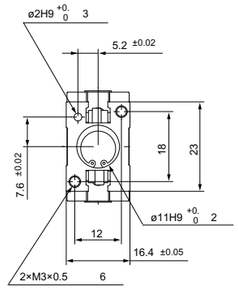

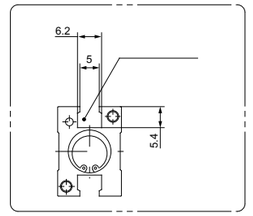

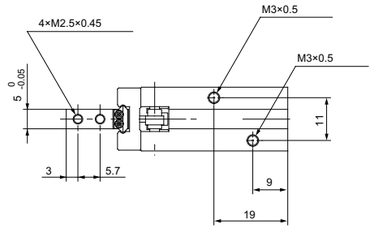

Model	MHZ2-10D	MHZ2-10S
PN	0247695	0249892
Weight	55g	55g

MHZ2-16 S/D

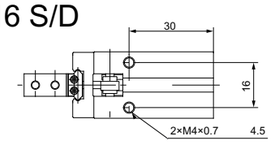

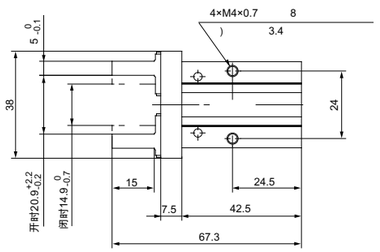

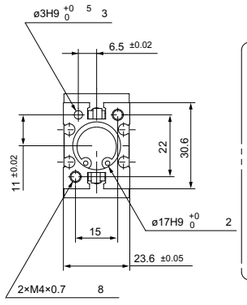

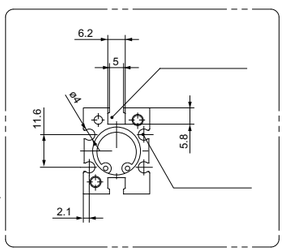

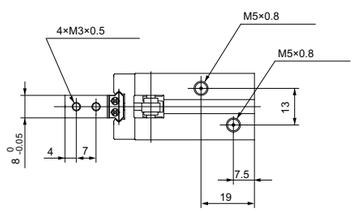

Model	MHZ2-16D	MHZ2-16S
PN	0249786	0242784
Weight	115g	115g

Paraller gripper

MHZ2-20 S/D

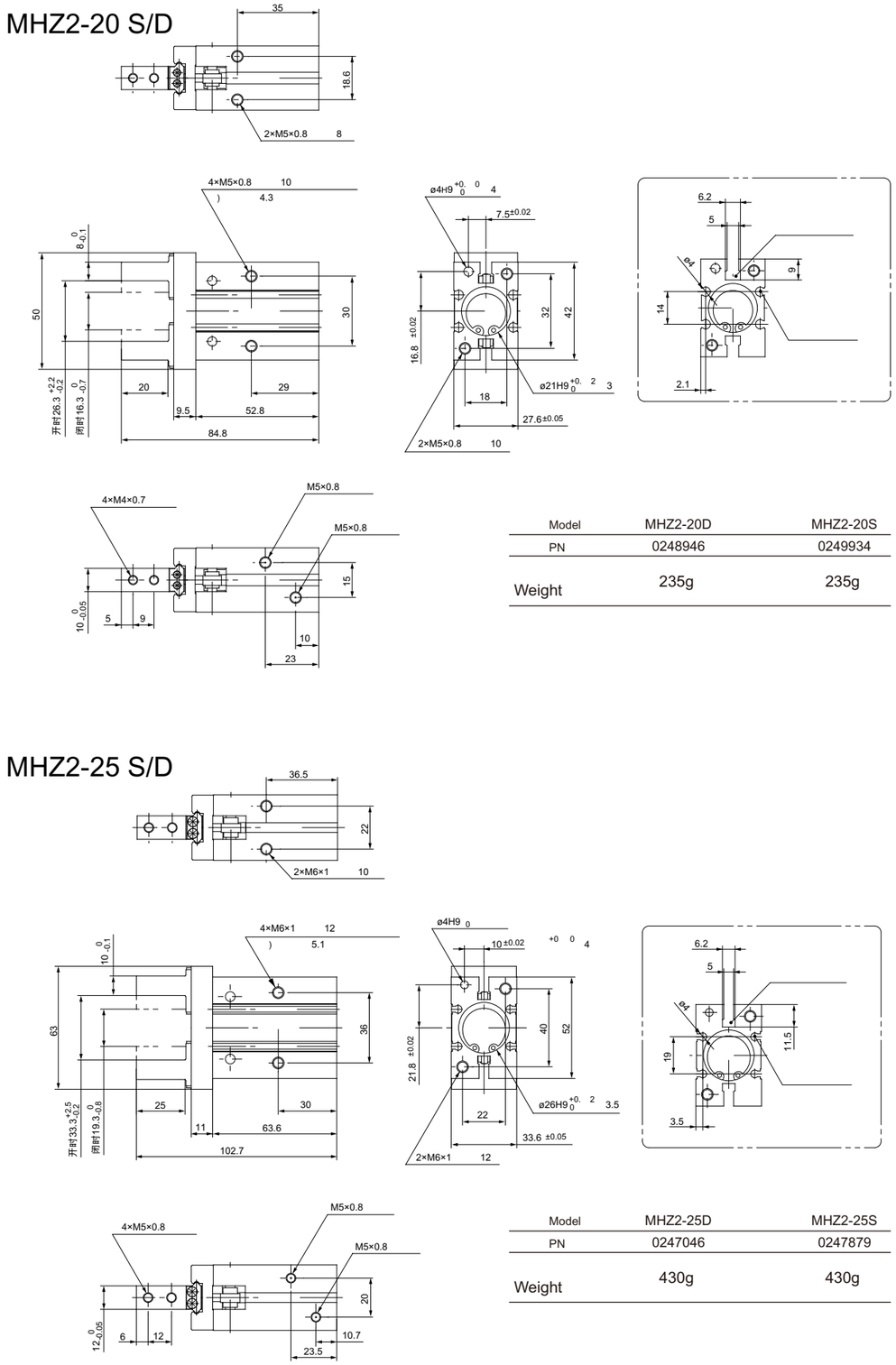

Model	MHZ2-20D	MHZ2-20S
PN	0248946	0249934
Weight	235g	235g

MHZ2-25 S/D

Model	MHZ2-25D	MHZ2-25S
PN	0247046	0247879
Weight	430g	430g

Paraller gripper

MHZ2-32 S/D

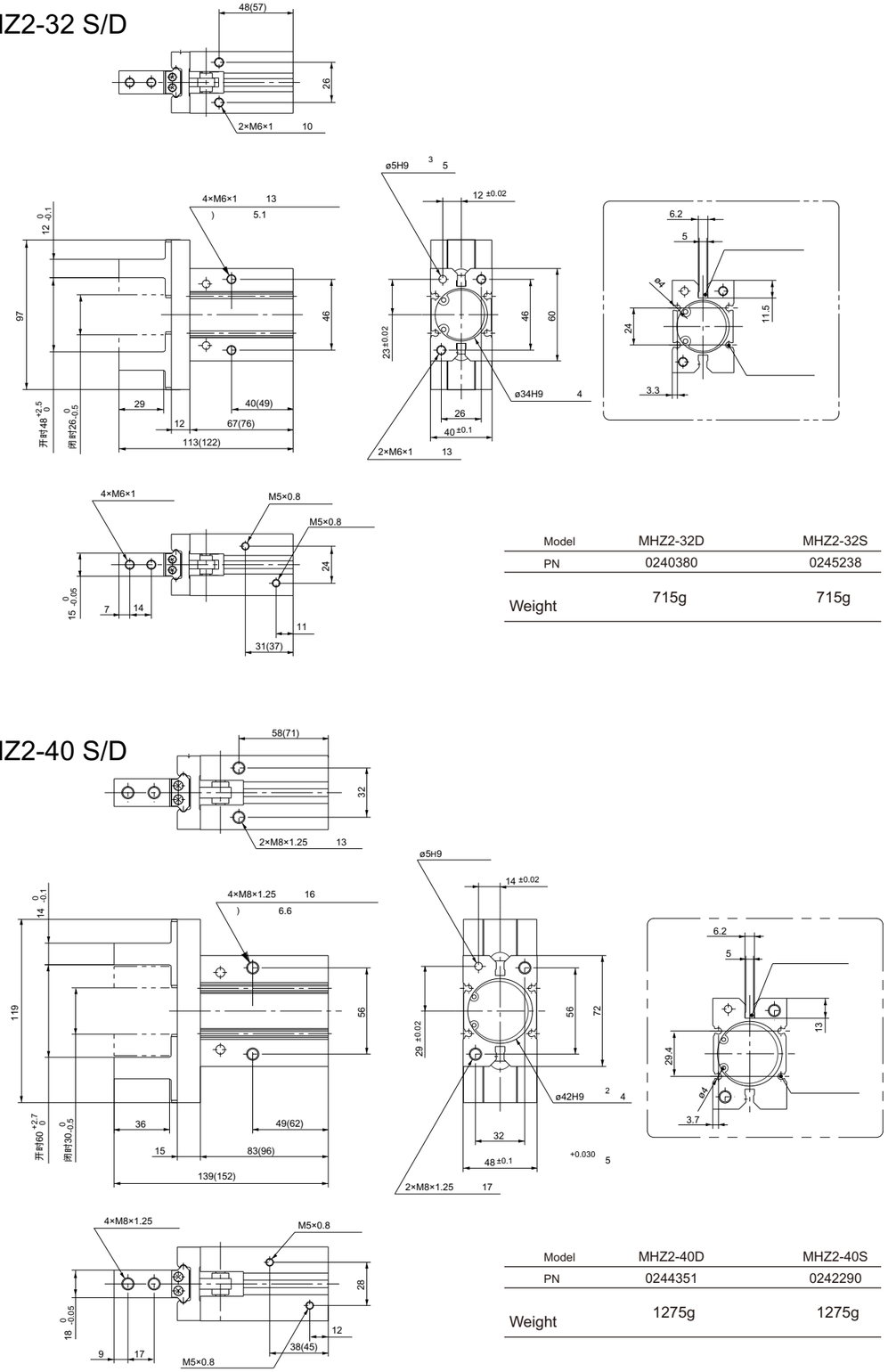

Model	MHZ2-32D	MHZ2-32S
PN	0240380	0245238
Weight	715g	715g

MHZ2-40 S/D

Model	MHZ2-40D	MHZ2-40S
PN	0244351	0242290
Weight	1275g	1275g

MHZL2

2-jaw parallel self-centering pneumatic gripper

Series:MHZL2

FEATURES

-
-
-
-
- (-NC) or (-NO) .
-

- Double acting.
- Long life and reliability, maintenance free.
- Various options for fastening.
- Optional proximity magnetic sensors.
- Spring closed (-NC) or spring open (-NO) option.
- Food-grade grease.

Action mode	PN.	Model	Medium	Pressure	Temperature	Repetition accuracy	MAX working frequency	Gripping force		Bore	Stoke	Weight	Air inlet
Double action	0248195	MHZL2-10D	compress air	2-7bar	5°-60℃	±0.02mm	2HZ	11N	17N	10	8	59g	M3x0.5
	0244633	MHZL2-16D						34N	45N	16	12	130g	M5x0.8
	0244739	MHZL2-20D						42N	66N	20	18	211g	M5x0.8
	0240540	MHZL2-25D						65N	104N	25	22	293g	M5x0.8
Single action	0241651	MHZL2-10S						7.1N		10	8	63g	M3x0.5
	0242149	MHZL2-16S						27N		16	12	139g	M5x0.8
	0241039	MHZL2-20S						33N		20	18	218g	M5x0.8
	0247590	MHZL2-25S						45N		25	22	302g	M5x0.8





Application example

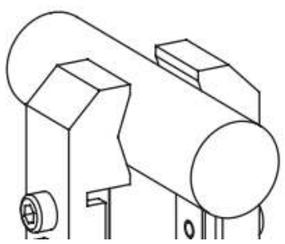

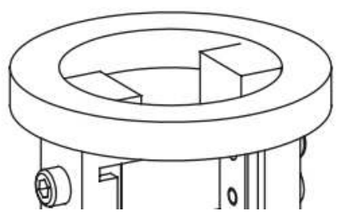

Paraller gripper

MHZL2-10 S/D

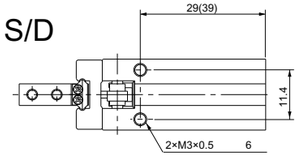

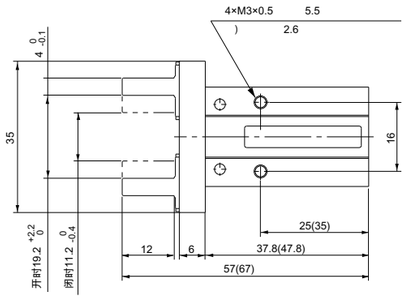

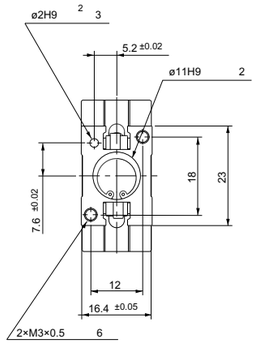

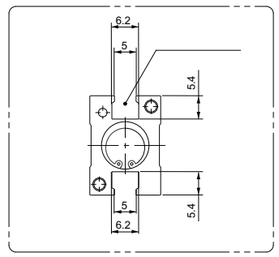

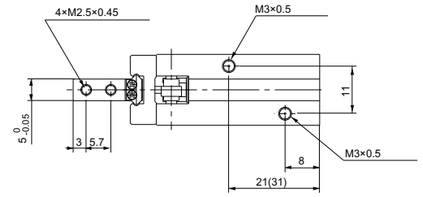

Model	MHZL2-10D	MHZL2-10S
PN	0248195	0241651
Weight	59g	63g

MHZL2-16 S/D

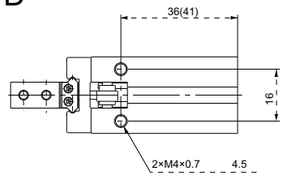

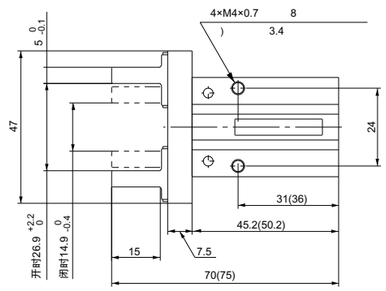

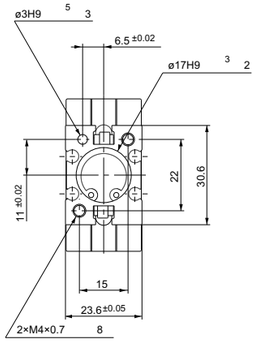

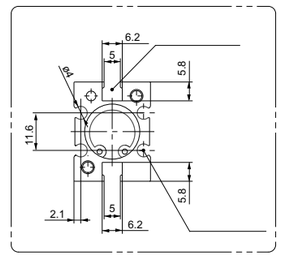

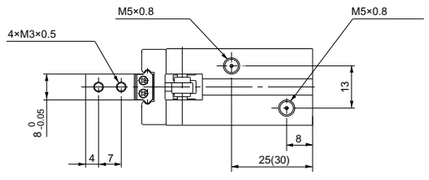

Model	MHZL2-16D	MHZL2-16S
PN	0244633	0242149
Weight	130g	139g

Paraller gripper

MHZL2-20 S/D

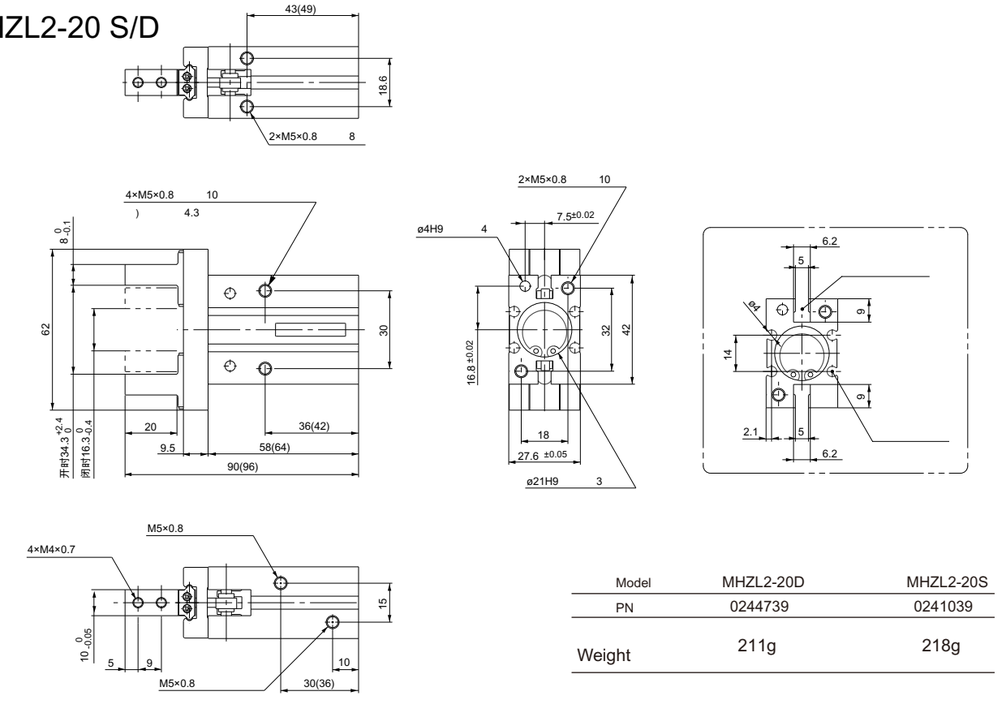

Model	MHZL2-20D	MHZL2-20S
PN	0244739	0241039
Weight	211g	218g

MHZL2-25 S/D

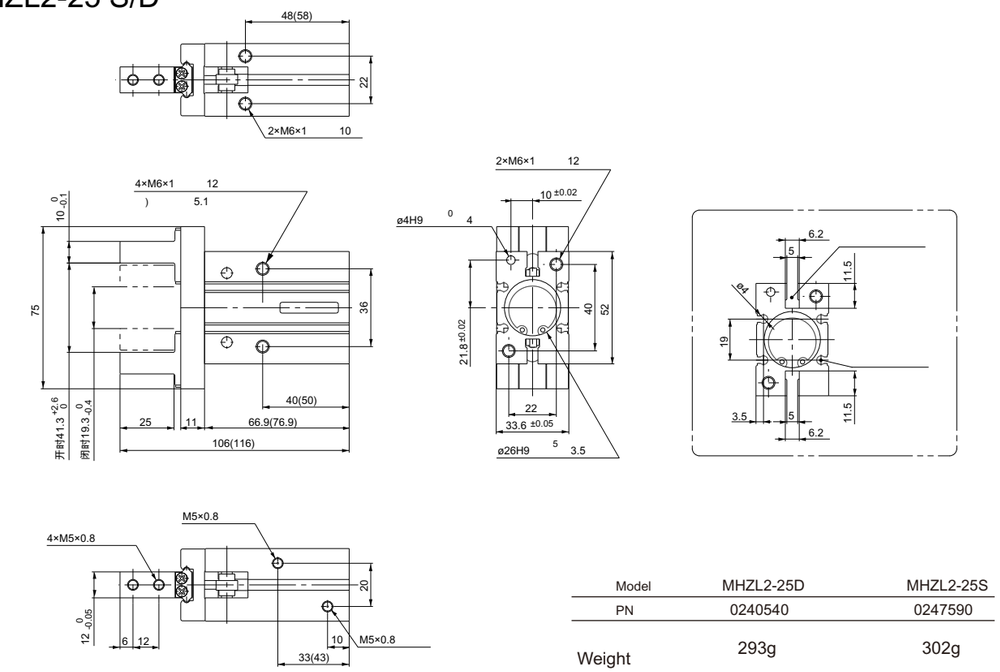

Model	MHZL2-25D	MHZL2-25S
PN	0240540	0247590
Weight	293g	302g

MHC2

2-jaw self centering angular pneumatic gripper

Series:MHC2



(-NC) or (-NO) .

FEATURES

- Double acting.
- Long life and reliability, maintenance free.
- Various options for fastening.
- Optional proximity magnetic sensors.
- Spring closed (-NC) or spring open (-NO) option.
- Food-grade grease.

Action mode	PN.	Model	Medium	Pressure	Temperature	Repetition accuracy	MAX working frequency	Gripping force N/m)	Bore	Stoke	Weight	Air inlet
Double action	0245153	MHC2-10D	compress air	2-7bar	5°-60℃	±0.02mm	2HZ	0.1	10	30°~10°	39g	M3x0.5
	0240191	MHC2-16D						0.39	16		91g	M5x0.8
	0243772	MHC2-20D						0.7	20		180g	M5x0.8
	0241316	MHC2-25D						1.36	25		311g	M5x0.8
Single action	0240696	MHC2-10S						0.07	10		39g	M3x0.5
	0245896	MHC2-16S						0.31	16		92g	M5x0.8
	0242146	MHC2-20S						0.54	20		183g	M5x0.8
	0242221	MHC2-25S						1.08	25		316g	M5x0.8

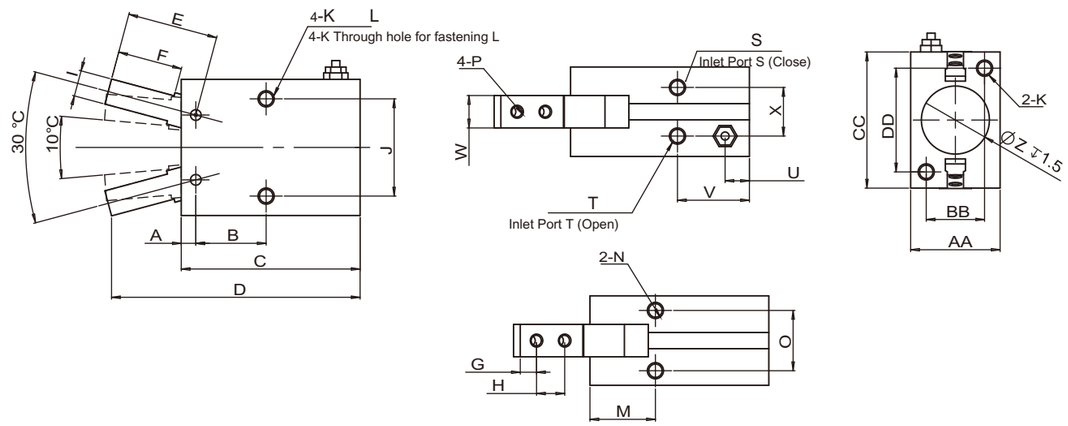

缸径 (Bore) (mm)	A	B	C	D	E	F	G	H	I	J	K	L	M	N	O	P	Pipe Size S	Pipe Size T	U	V	W	X	Z	AA	BB	CC	DD
10	2.8	12.8	38.6	52.4	17.2	12	3	5.7	2	10	M3x0.5↧5	2.6	8.8	M3x0.5↧5	11.4	M3x0.5	M3x0.5		7.2	18.8	6.4	10.4	11	16.4	12	23	18
16	3.9	16.2	44.6	62.5	22.6	16	4	7	7	24	M4X0.7↧8	3.4	10.7	M4X0.7↧8	13	M3X0.5	M5X0.8		7	18.3	8	13	17	23.6	15	30.6	22
20	4.5	21.7	55.2	78.7	28	20	5.2	9	8	30	M5X0.8↧10	4.3	15.7	M5X0.8↧8	15	M4X0.7	M5X0.8		7.5	22.2	10	15	21	27.6	18	42	32
25	4.6	25.8	60.4	92	37.5	27	8	12	5.5	36	M6x1↧11	5.1	19.3	M6x1↧10	22	M5x0.8	M5x0.8		7.7	23.5	12	20	11	33.6	22	52	40

Application example

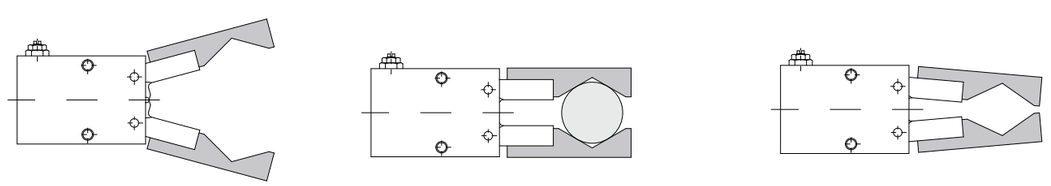

MHS3

3-jaw self centering angular pneumatic gripper

Series:MHS3

FEATURES

- Double acting.
- Long life and reliability, maintenance free.
- Various options for fastening.
- Optional proximity magnetic sensors.
- Food-grade grease.

Action mode	PN.	Model	Medium	Pressure	Temperature	Repetition accuracy	MAX working frequency	N) Gripping force		Bore	Stoke	Weight	Air inlet
Double action	0242396	MHS3-16D	compress air	2-7bar	5°-60℃	±0.01mm	2HZ	14	16	16	4	60g	M3x0.5
	0240048	MHS3-20D						25	28	20	4	100g	M5x0.8
	0244440	MHS3-25D						42	47	25	6	140g	M5x0.8
	0243594	MHS3-32D						74	82	32	8	237g	M5x0.8
	0246017	MHS3-40D						118	130	40	8	351g	M3x0.5
	0248476	MHS3-50D						187	204	50	12	541g	M5x0.8
	0243788	MHS3-63D						335	359	63	16	992g	M5x0.8
	0244159	MHS3-80D						500	525	80	20	1850g	G1/8





MHS3-16D~25D

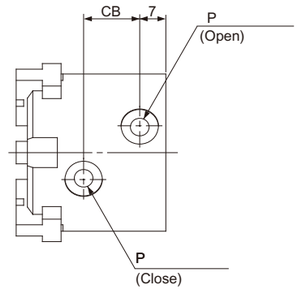

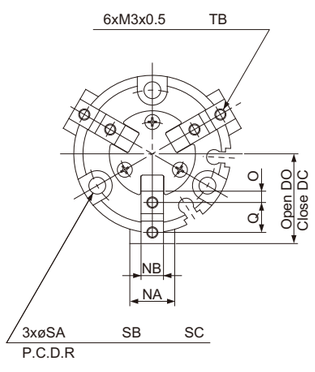

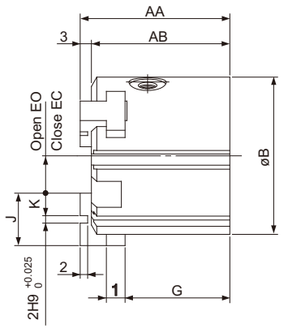

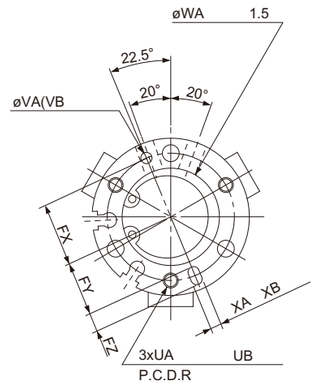

MHS3-16D

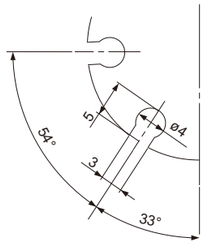

MHS3-20D

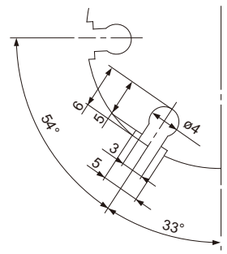

MHS3-25D

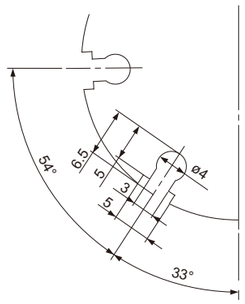

(mm)

PN.	Model	AA	AB	B	CB	DC	DO	EC	EO	FX	FY	FZ	G	1	J	K	NA	NB	O	P	Q	R
0242396	MHS3-16D	35	32	30	11	15	17	5	7	12.5	11	3	25	4	10	4	8	5h9 0 -0.030	2	M3×0.5	6	25
0240048	MHS3-20D	38	35	36	13	18	20	6	8	14.5	13	3	27	5	12	5	10	6h9 0 -0.030	2.5	M5×0.8	7	29
0244440	MHS3-25D	40	37	42	15	21	24	7	10	17	14.5	5	28	5	14	6	12	6h9 0 -0.030	3	M5×0.8	8	34

PN.	Model	SA	SB	SC	TB	UA	UB	VA	VB	WA	XA	XB
0242396	MHS3-16D	3.4	6.5	8	5	M3×0.5	4.5	2H9 +0.025 0	2	17H9 +0.043 0	2H9 +0.025 0	2
0240048	MHS3-20D	3.4	6.5	9.5	6	M3×0.5	6	2H9 +0.025 0	2	21H9 +0.052 0	2H9 +0.025 0	2
0244440	MHS3-25D	4.5	8	10	6	M4×0.7	6	3H9 +0.025 0	3	26H9 +0.052 0	3H9 +0.025 0	3

MHS3-32D~80D

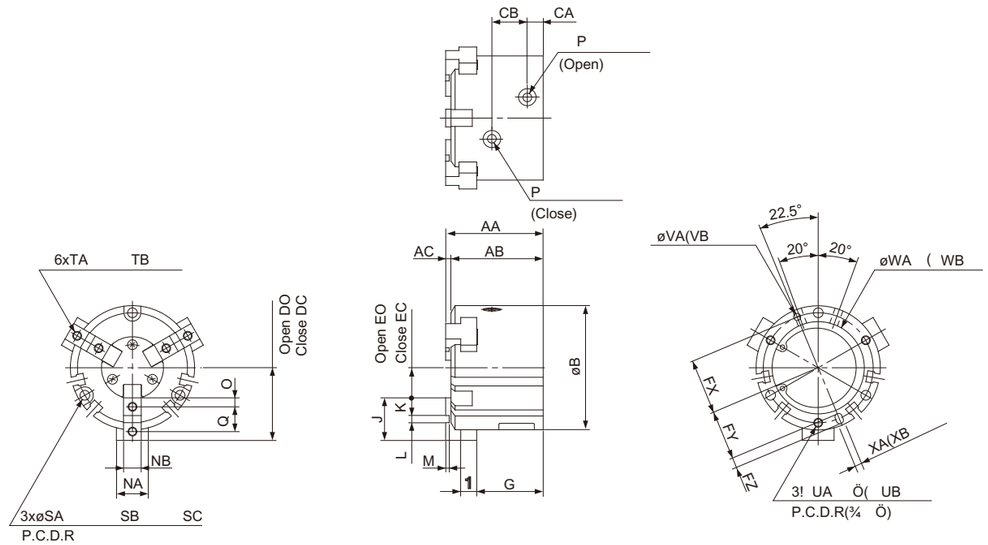

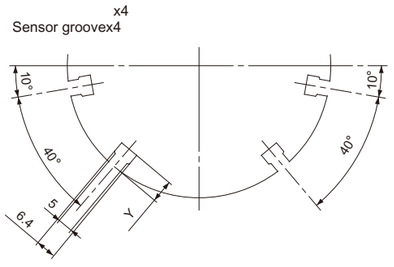

(mm)

PN.	Model	AA	AB	AC	B	CA	CB	DC	DO	EC	EO	FX	FY	FZ	G	1	J	K	L	M	NA	NB
0243594	MHS3-32D	44	41	3	52	8	16	28	32	8	12	22	19.5	5	30.5	6	20	9	2H9 $^{+0.025}_{0}$	2	14	8h9 $^{0}_{-0.036}$
0246107	MHS3-40D	47	44	3	62	9	17	31	35	10	14	26.5	23.5	6	32	7	21	9	3H9 $^{+0.025}_{0}$	2	16	8h9 $^{0}_{-0.036}$
0248476	MHS3-50D	55	52	3	70	9	20	35	41	11	17	31	28	6	37.5	9	24	10	4H9 $^{+0.030}_{0}$	2	18	10h9 $^{0}_{-0.036}$
0243788	MHS3-63D	66	62	4	86	12	22	43	51	15	23	38	34.5	7	44	11	28	11	6H9 $^{+0.030}_{0}$	3	24	12h9 $^{0}_{-0.043}$
0244159	MHS3-80D	82	77	5	106	13.5	27	53.5	63.5	21.5	31.5	47.5	43.5	8	56	12	32	12	8H9 $^{+0.036}_{0}$	4	28	14h9 $^{0}_{-0.043}$

PN.	Model	O	P	Q	R	SA	SB	SC	TA	TB	UA	UB	VA	VB	WA	WB	XA	XB	Y
0243594	MHS3-32D	4.5	M5×0.8	11	44	4.5	8	9	M4×0.7	8	M4×0.7	6	3H9 $^{+0.025}_{0}$	3	34H9 $^{+0.062}_{0}$	2	3H9 $^{+0.025}_{0}$	3	6
0246107	MHS3-40D	4.5	M5×0.8	12	53	5.5	9.5	9	M4×0.7	8	M5×0.8	7.5	4H9 $^{+0.030}_{0}$	4	42H9 $^{+0.062}_{0}$	2	4H9 $^{+0.030}_{0}$	4	8
0248476	MHS3-50D	5	M5×0.8	14	62	5.5	9.5	12	M5×0.8	10	M5×0.8	10	4H9 $^{+0.030}_{0}$	4	52H9 $^{+0.074}_{0}$	2	4H9 $^{+0.030}_{0}$	4	7
0243788	MHS3-63D	5.5	M5×0.8	17	76	6.6	11	14	M5×0.8	10	M6×1	9	5H9 $^{+0.030}_{0}$	5	65H9 $^{+0.074}_{0}$	2.5	5H9 $^{+0.030}_{0}$	5	7.5
0244159	MHS3-80D	6	Rc1/8(G1/8, NPT1/8)	20	95	6.6	11	19	M6×1	12	M6×1	12	6H9 $^{+0.030}_{0}$	6	82H9 $^{+0.087}_{0}$	3	6H9 $^{+0.030}_{0}$	6	9

MHZ2

2-jaw parallel self-centering pneumatic gripper

Series:ESA.PPG

-
-
-
-
-
-

FEATURES

- Double acting.
- High performance in small dimensions.
- The rugged construction lends itself to heavy duty applications.
- Optional proximity magnetic sensors.
- For a trouble free long life without maintenance.
- Food-grade grease.





Medium	Compressed air			
Operating pressure range	2 ÷ 8 bar			
Operating temperature range	5° ÷ 60°C.			
6bar Opening gripping force at 6 bar on each jaw	23 N	52 N	67 N	80 N
6bar Opening total gripping force at 6 bar	46 N	104 N	134 N	160 N
6bar Closing gripping force at 6 bar on each jaw	20 N	47 N	60 N	73 N
6bar Closing total gripping force at 6 bar	40 N	94 N	120 N	146 N
Total stroke (±0.3 mm)	4 mm	6 mm	8 mm	12 mm
Maximum working frequency	3 Hz	3 Hz	3 Hz	3 Hz
Cycle air consumption	0.5 cm^3	1.4 cm^3	2.4 cm^3	4.5 cm^3
Closing time without load	0.01 s	0.01 s	0.02 s	0.05 s
Repetition accuracy	0.02 mm	0.02 mm	0.02 mm	0.02 mm
Weight	33 g	43 g	86 g	170 g

Application example

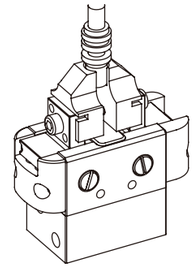

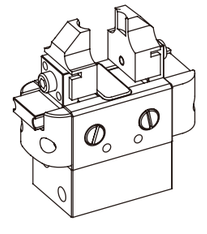

ESA.PPG.20

(mm)
Dimensions (mm)

pneumatic gripper

PN	0245017
Model	ESA.PPG.20

● 33g ● Weight 33g

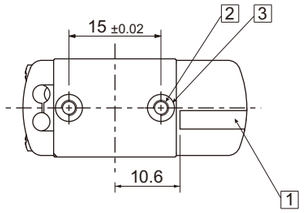

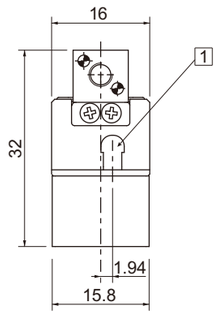

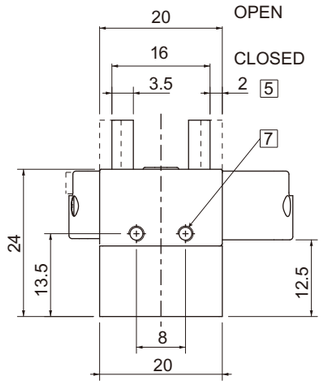

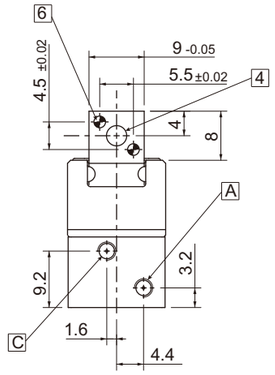

1 Hole for programmable sensor

2 (N°2) M2.5x6mm
Hole for fastening

3 (N°2) Ø4H8x2mm
Centering sleeve hole

4 M4
Through hole for fastening

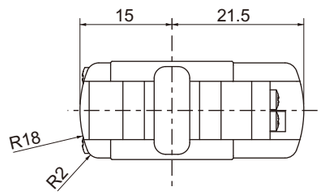

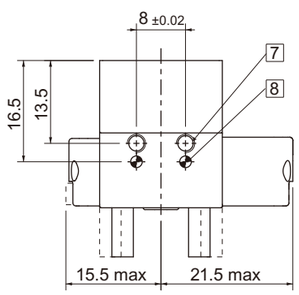

5 Stroke each jaw

6 Ø1.5H8x3.5mm
Dowel pin hole

7 (N°2) M2.5x4mm
Hole for fastening

8 Ø1.5H8x3mm
Dowel pin hole

A M3
Gripper opening

C M3
Gripper closing

ESA.PPG.25

(mm)
Dimensions (mm)

pneumatic gripper

PN	0245016
Model	ESA.PPG.25

● 43g ● Weight 43g

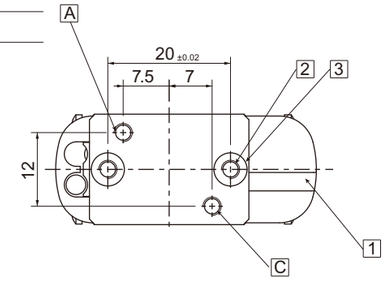

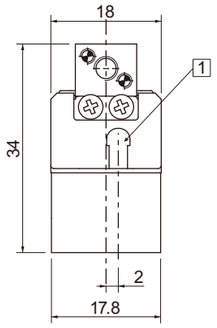

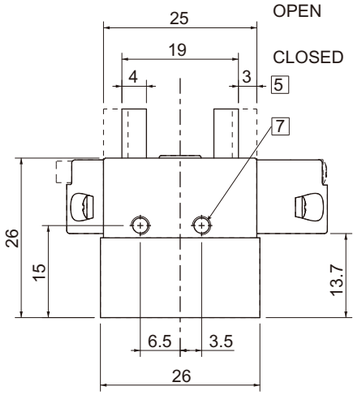

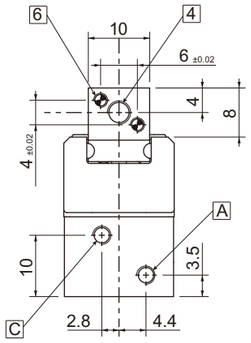

1 Hole for programmable sensor

2 (N°2) M3x7mm
Hole for fastening

3 (N°2) Ø5H8x2.4mm
Centering sleeve hole

4 M4
Through hole for fastening

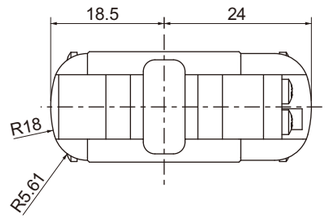

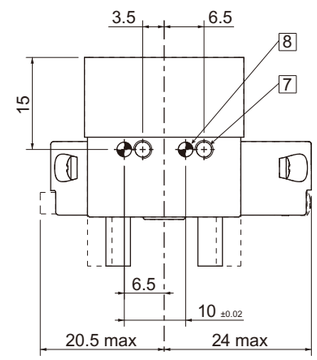

5 Stroke each jaw

6 Ø1.5H8x4mm
Dowel pin hole

7 (N°2) M3x5mm
Hole for fastening

8 Ø2H8x4mm
Dowel pin hole

A M3
Gripper opening

C M3
Gripper closing

ESA.PPG.32

(mm)

Dimensions (mm)

pneumatic gripper

PN	0245015
Model	ESA.PPG.32

● 86g ● Weight 86g

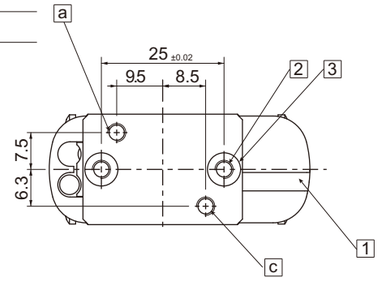

1 Hole for programmable sensor

2 (N°2) M3x7mm
Hole for fastening

3 (N°2) Ø5H8x2.4mm
Centering sleeve hole

4 M4
Through hole for fastening

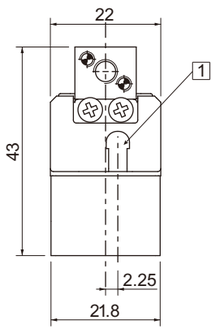

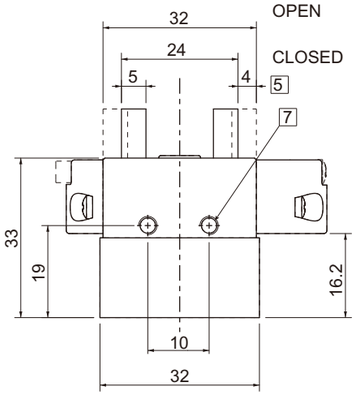

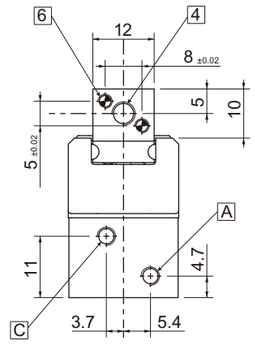

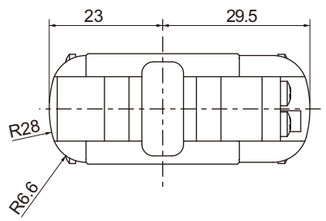

5 Stroke each jaw

6 Ø1.5H8x4mm
Dowel pin hole

7 (N°2) M3x5mm
Hole for fastening

8 Ø2H8x4mm
Dowel pin hole

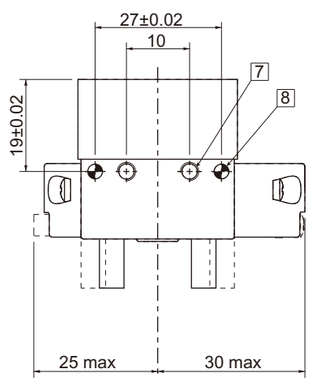

A M5
Gripper opening

C M5
Gripper closing

A M3
Gripper opening

C M3
Gripper closing

ESA.PPG.40

(mm)

Dimensions (mm)

pneumatic gripper

PN	0245014
Model	ESA.PPG.40

● 170g ● Weight 170g

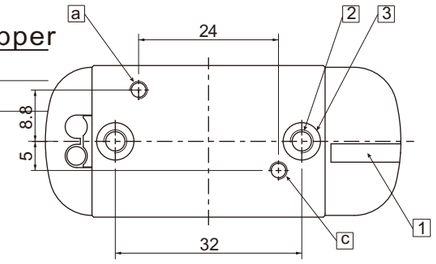

1 Hole for programmable sensor

2 (N°2) M4x9.5mm
Hole for fastening

3 (N°2) Ø6H8x2.9mm
Centering sleeve hole

4 M5
Through hole for fastening

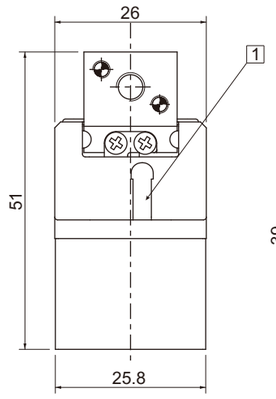

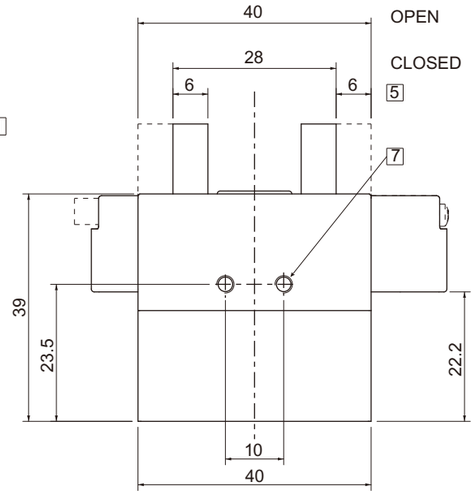

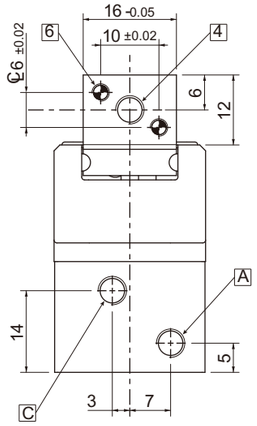

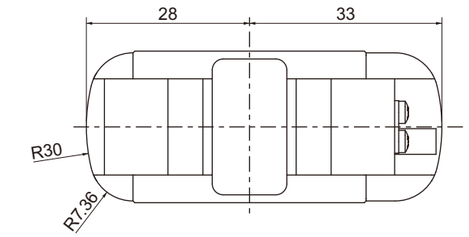

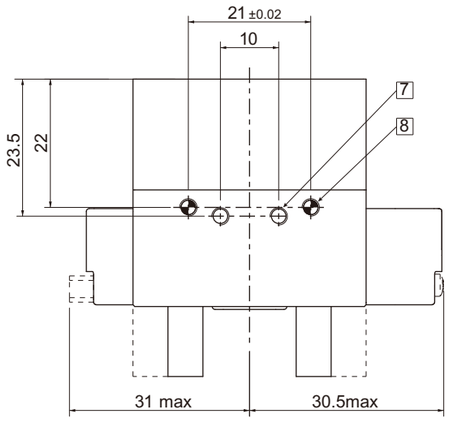

5 Stroke each jaw

6 Ø2.5H8x6mm
Dowel pin hole

7 (N°2) M3x5mm
Hole for fastening

8 Ø2.5H8x6mm
Dowel pin hole

a M3
Compressed air in a: gripper opening

A M5
Compressed air in A: gripper opening

c M3
Compressed air in c: gripper closing

C M5
Compressed air in C: gripper closing

ESA.THG)

3-jaw self-centring pneumatic gripper

Series:ESA.THG

FEATURES

- Double acting.
- The rugged construction lends itself to heavy duty applications.
- Optional proximity magnetic sensors.
- For a trouble free long life without maintenance.
- Food-grade grease.





Medium	Compressed air				
Operating pressure range	2 ÷ 8 bar				
Operating temperature range	5° ÷ 100°C.				
6bar Opening gripping force at 6 bar on each jaw	95N	142N	265N	380N	760N
6bar Opening total gripping force at 6 bar	285N	426N	795N	1140N	2280N
6bar Closing gripping force at 6 bar on each jaw	87N	127N	245N	350N	720N
6bar Closing total gripping force at 6 bar	261N	381N	735N	1050N	2160N
Total stroke (±0.3 mm)	3x2.5mm	3x4mm	3x6mm	3x8mm	3x10mm
Maximum working frequency	3Hz	3Hz	2Hz	2Hz	1Hz
Cycle air consumption	3cm³	8cm³	22cm³	42cm³	106cm³
Closing time without load	0.02s	0.02s	0.05s	0.05s	0.2s
Repetition accuracy	0.02mm	0.02mm	0.02mm	0.02mm	0.02mm
Weight	117g	237g	430g	760g	1420g

Application example

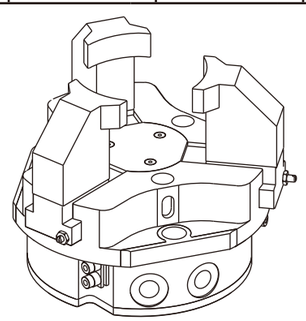

(mm)
Dimensions (mm)

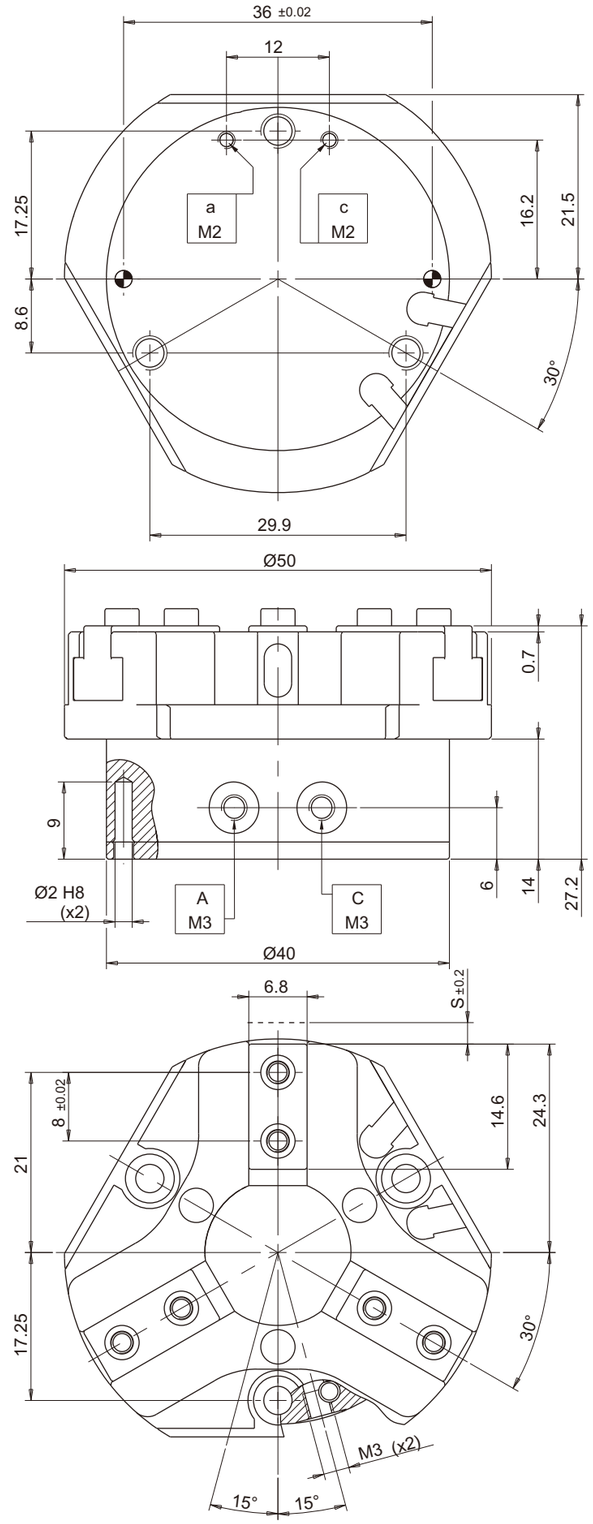

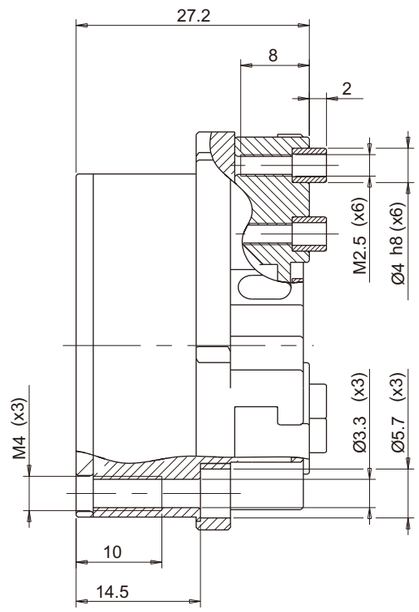

pneumatic gripper

PN	0245101
Model	ESA.THG.2725
117g	Weight 237g

mm
Dimensions (mm)

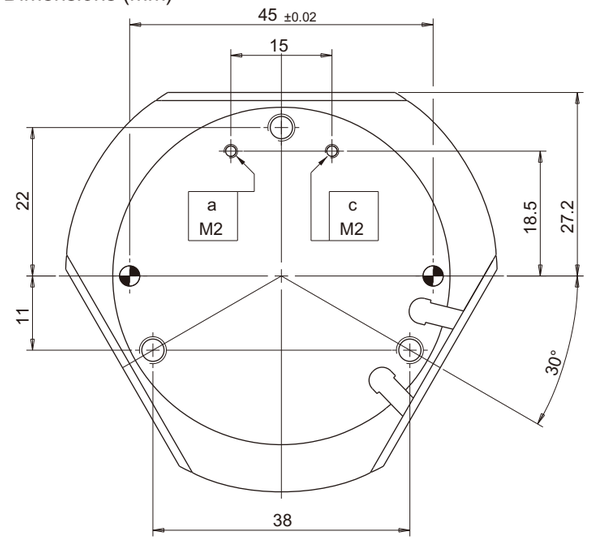

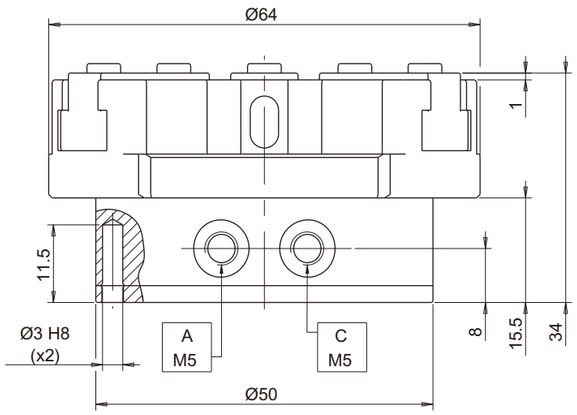

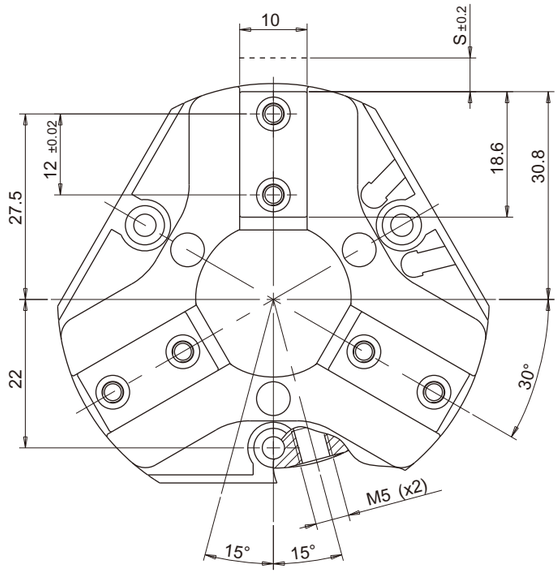

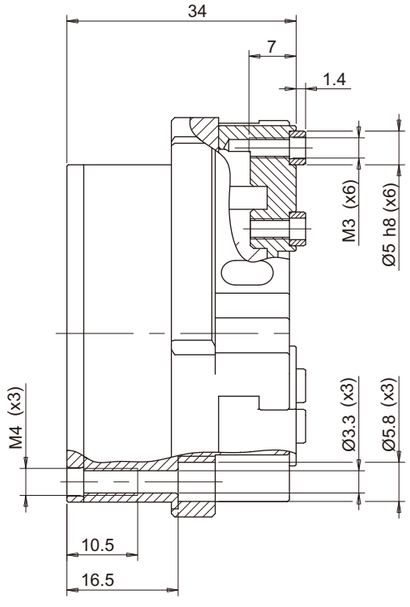

pneumatic gripper

PN	0245102
Model	ESA.THG.3304

237g Weight 237g

(mm)
Dimensions (mm)

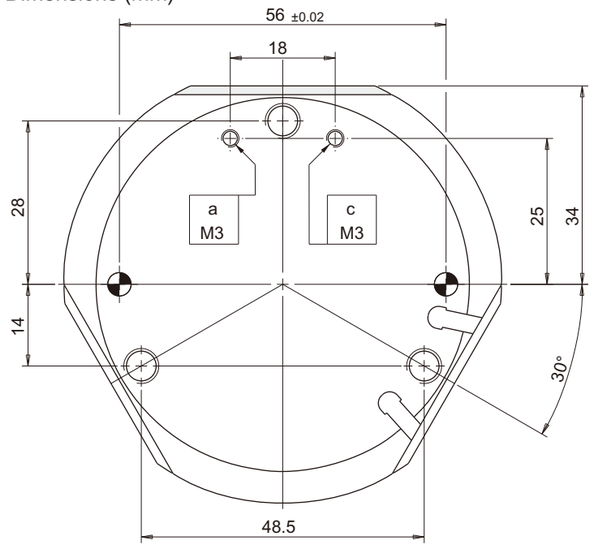

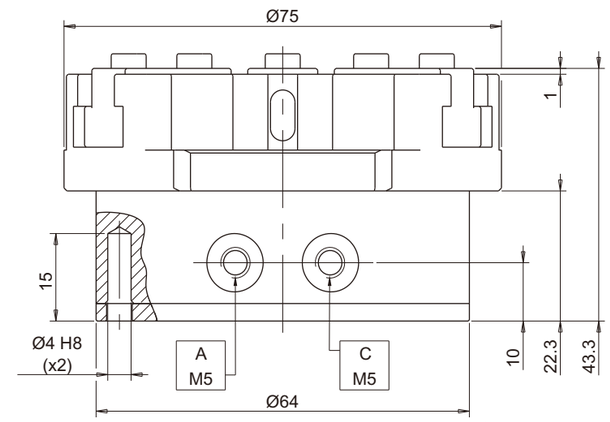

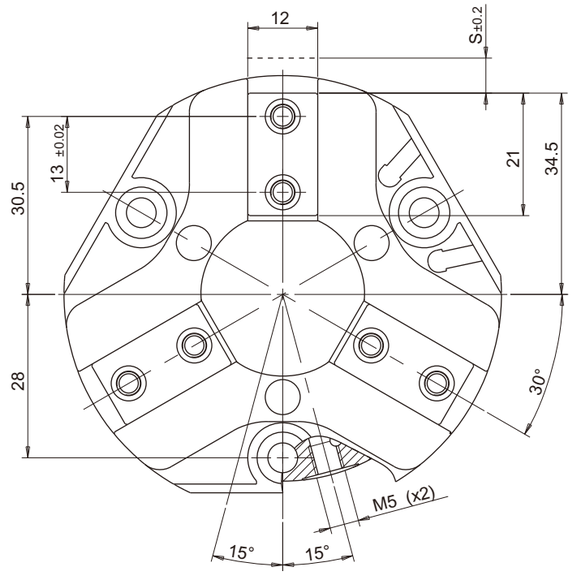

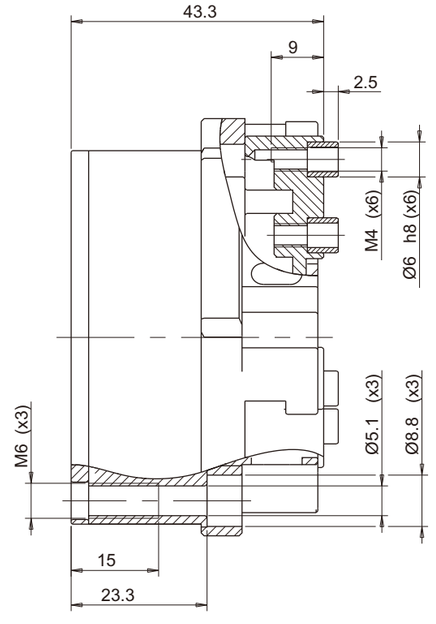

pneumatic gripper

PN	0245103
Model	ESA.THG.4506

430g Weight 430g

mm
Dimensions (mm)

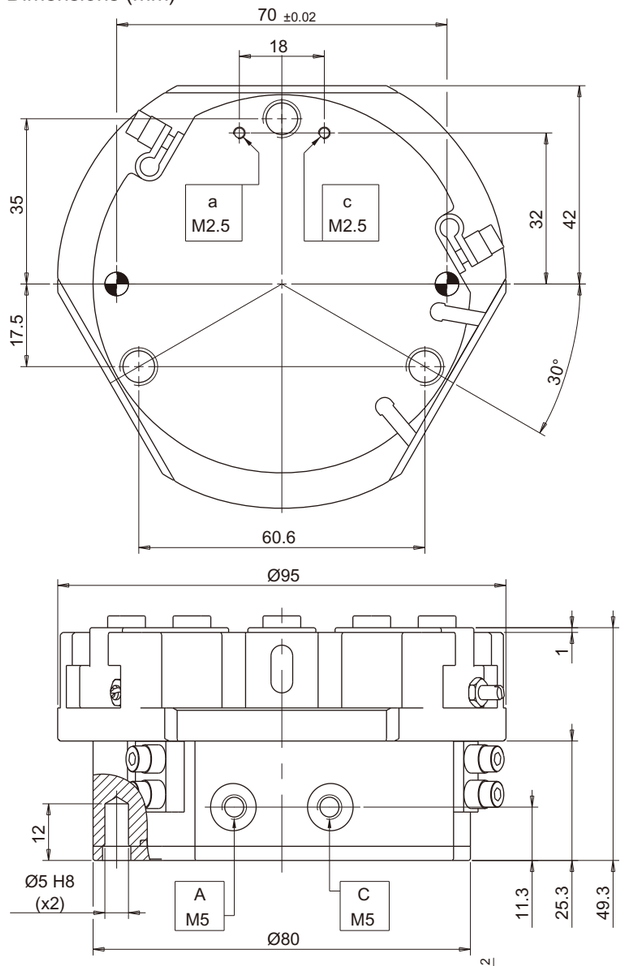

pneumatic gripper

PN	0245104
Model	ESA.THG.5408

760g Weight 760g

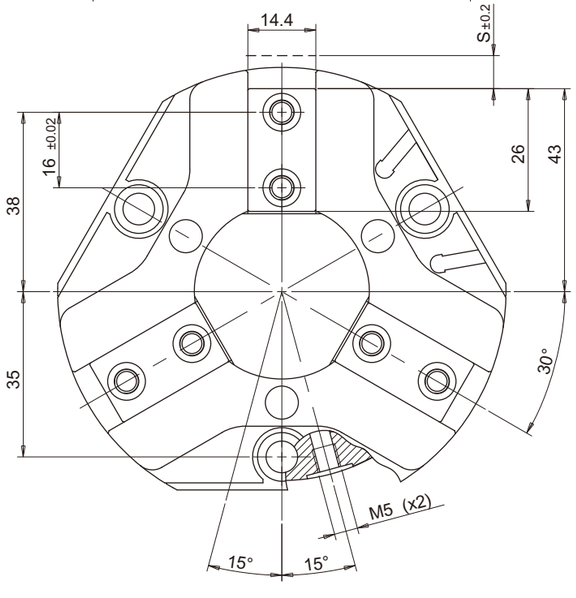

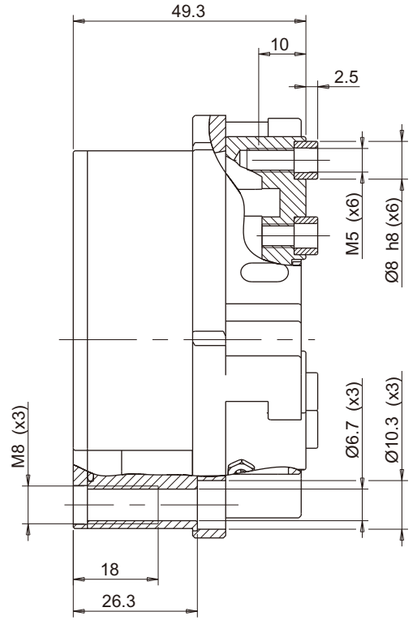

(mm)
Dimensions (mm)

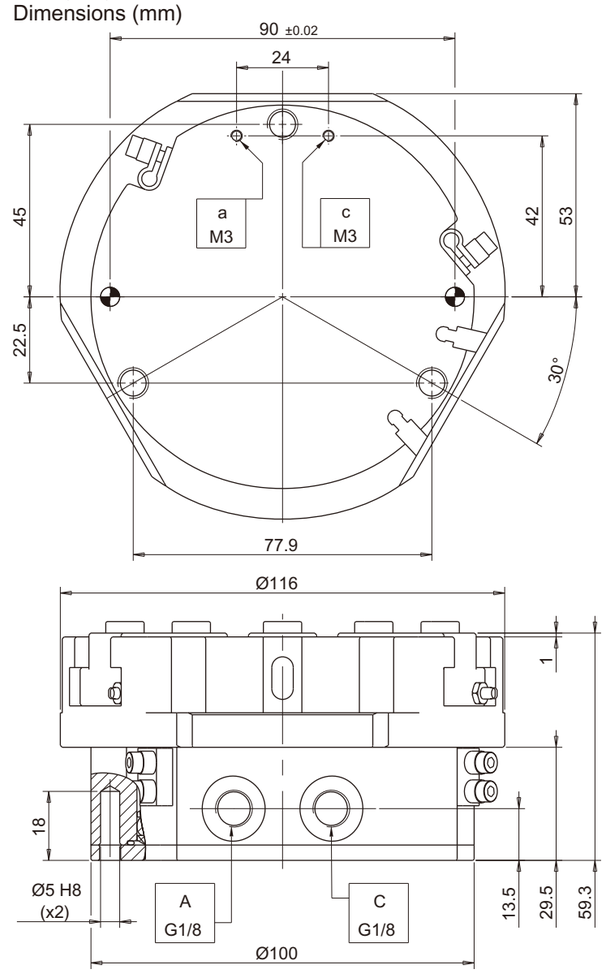

pneumatic gripper

PN	0245106
Model	ESA.THG.7610

1430g Weight 1430g

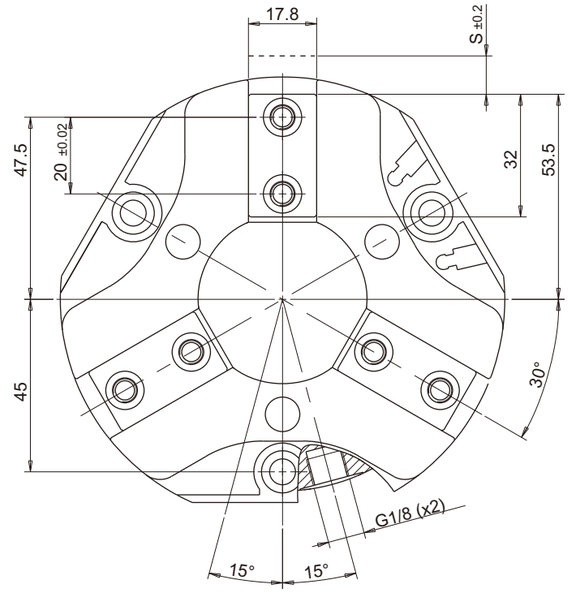

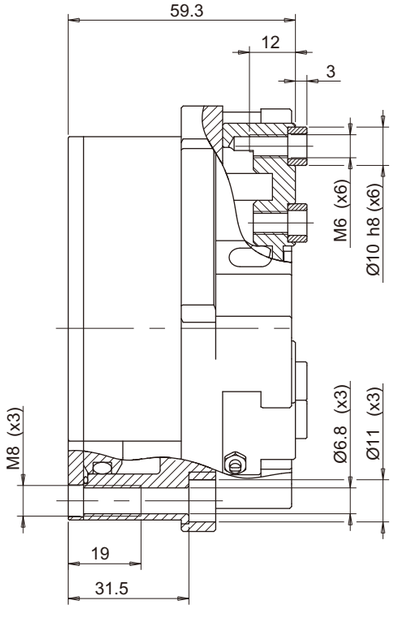

Mould Positioner

Provide a precise centering between
the robot and the mould.
Lock by steel ball.
Single action.

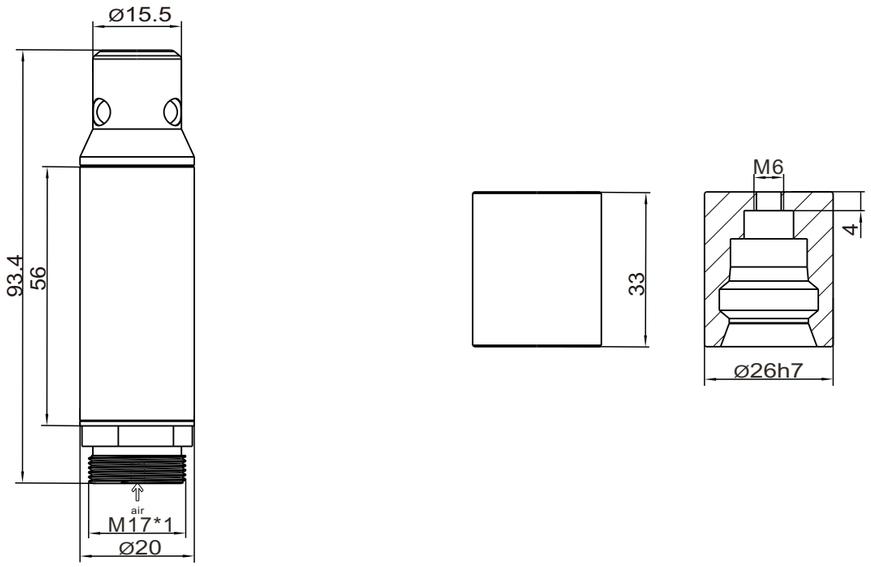

Mould Positioner	
PN	0241004
Model	ESA.AMP.20.A
75g	Weight 75g

Mould Positioner	
PN	0245966
Model	ESA.AMP.20.B
87g	Weight 87g

Application example







Mould Positioner

Provide a precise centering between
the robot and the mould.
Lock by steel ball.
Single action.

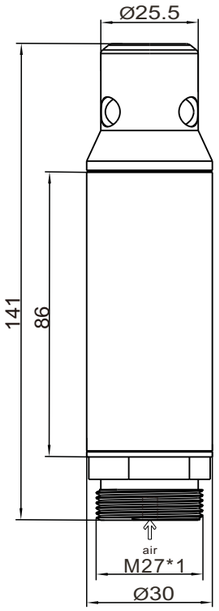

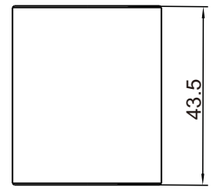

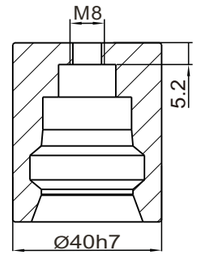

Mould Positioner	
PN	0246455
Model	ESA.AMP.30.A
300g	Weight 300g

Mould Positioner	
PN	0243238
Model	ESA.AMP.30.B
264g	Weight 264g

Application example







buffer bracket



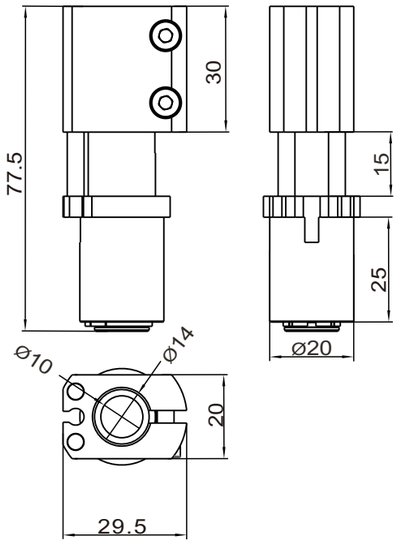

buffer bracket	
PN	0245012
Model	ESA.BBM.2014

● 57g ● Weight 57g



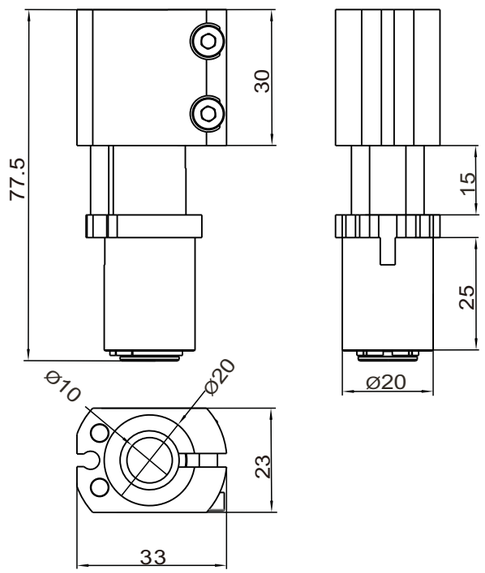

buffer bracket	
PN	0242666
Model	ESA.BBM.2020

● 65g ● Weight 65g

Bulging Device

New concept for innovative air hands.

Downward movement (GZD),or upward movement (GZU). GZD GZU

The elastic part is make of Silicone.

Grip diameters from 14 to 22mm. 14-22mm

Optional nose cones for centering.

Optional proximity magnetic sensors.

Several mounting accessories.



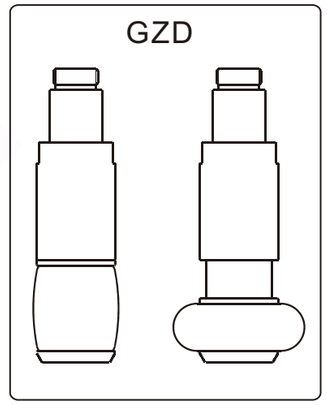

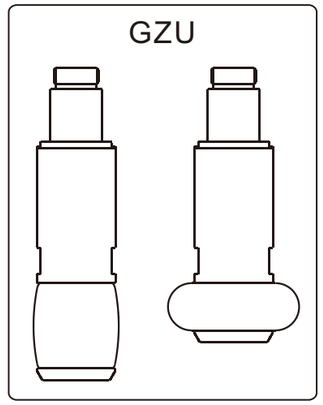

型号指引 Model section

ESA.GZD.18.D

Actuation direction
D -
D-Downward
U-
U-Upward

Base diameter
14-16-18-20-22

Air feeding
D/U-
D/U-By coaxial air fitting
HD/HU-
HD/HU-By side air fitting and through hole

...H

Note:Through hole
The ...H models have a central through hole.it can be used to blow compressed air,or to provide vacuum,with the purpose to cool a part,or to check the leakage.



Spare elastic part



Silicone -70°C +200°C

T	Ø14	Ø16	Ø18	Ø20	Ø22
	0242627	0248406	0240963	0242991	0249685

ESA.GZP.14 ESA.GZP.16 ESA.GZP.18 ESA.GZP.20 ESA.GZP.22

Centering cones



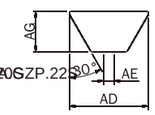

PN.			
Mode			
Weight	1 g	1.5 g	2 g
ØAD [mm]	11.8	15.5	18.8
ØAE [mm]	-	-	-
ØAG [mm]	4.5	6.5	8
ESA.GZD ESA.GZU	Ø14 Ø16	Ø18 Ø20	Ø22

ESA.GZD ESA.GZDseries

ESA.GZD..D

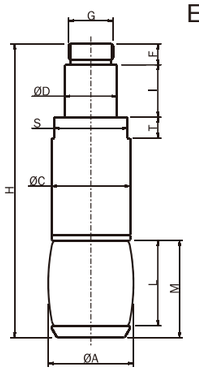

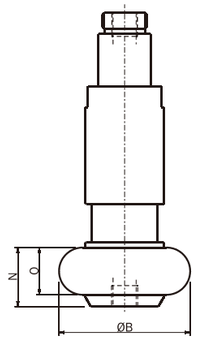

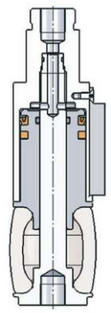

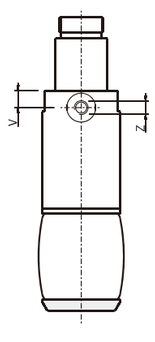

ESA.GZD..HD

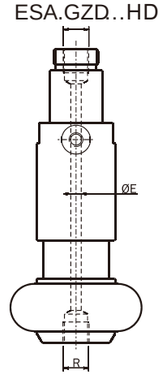

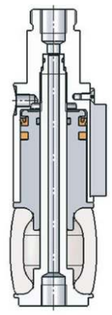

PN.	Model	m	ØA	ØB	ØC	ØD	ØE	F	G	H	I	L	M	N	O	P	R	S	T	V	Z
0247987 0241998	ESA.GZD.14.D ESA.GZD.14.HD	17g	15	19.5	14	14	- 2	5.5	M12x1	62.3	14	13	15.8	8.8	6	M5	M3	13	6	- 4.5	- M3
0246163 0244445	ESA.GZD.16.D ESA.GZD.16.HD	17g	18	21.5	14	14	- 2	5.5	M12x1	62.3	14	13	15.8	8.8	6	M5	M3	13	6	- 4.5	- M3
0249153 0240738	ESA.GZD.18.D ESA.GZD.18.HD	28g	19.5	24.5	18	14	- 2.5	5.5	M12x1	70.5	14	16.5	19.5	12	9	M5	M3	16	6	- 5.3	- M5
0245728 0240899	ESA.GZD.22.D ESA.GZD.22.HD	28g	22.5	26.5	18	14	- 2.5	5.5	M12x1	70.5	14	16.5	19.5	12	9	M5	M3	16	6	- 5.3	- M5
0246844 0249007	ESA.GZD.24.D ESA.GZD.24.HD	43g	24	31.5	21.5	14	- 2.5	5.5	M12x1	80	14	21	24.2	12.2	11	M5	M3	19	7	- 5.5	- M5

ESA.GZU ESA.GZUseries

ESA.GZU..U

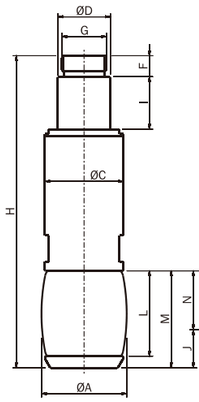

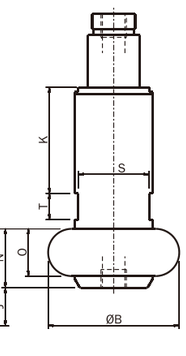

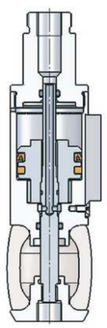

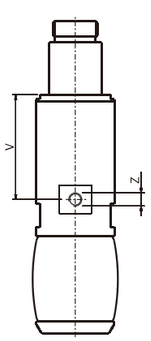

ESA.GZU..HU

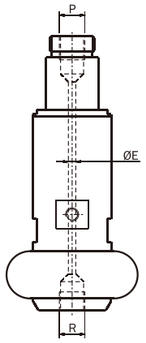

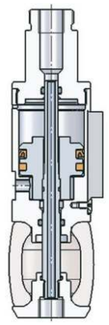

PN.	Model	m	ØA	ØB	ØC	ØD	ØE	F	G	H	I	J	K	L	M	N	O	P	R	S	T	V	Z
0249403 0246937	ESA.GZU.14.U ESA.GZU.14.HU	20g	15	19.5	14	14	- 1.3	5.5	M12x1	68.5	14	7	24.2	13	15.8	8.8	6	M5	M3	13	6	- 23.2	- M3
0240042 0247981	ESA.GZU.16.U ESA.GZU.16.HU	20g	18	21.5	14	14	- 1.3	5.5	M12x1	68.5	14	7	24.2	13	15.8	8.8	6	M5	M3	13	6	- 23.2	- M3
0249281 0249405	ESA.GZU.18.U ESA.GZU.18.HU	35g	19.5	24.5	18	14	- 1.3	5.5	M12x1	78	14	7.5	29	16.5	19.5	12	9	M5	M3	16	7	- 28	- M5
0248833 0245527	ESA.GZU.22.U ESA.GZU.22.HU	35g	22.5	26.5	18	14	- 1.3	5.5	M12x1	78	14	7.5	29	16.5	19.5	12	9	M5	M3	16	7	- 28	- M5
0247387 0245354	ESA.GZU.24.U ESA.GZU.24.HU	50g	24	31.5	21.5	14	- 1.8	5.5	M12x1	86.5	14	10	31.8	21	24.2	14.2	11	M5	M3	20	8	- 31.5	- M5

Application example

[1]

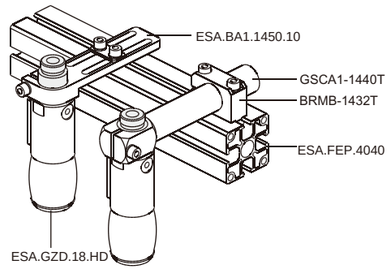

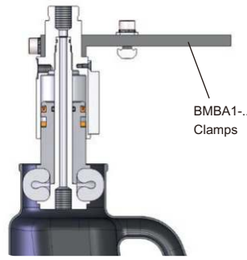

[2]

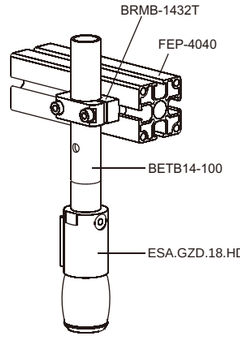

[3]

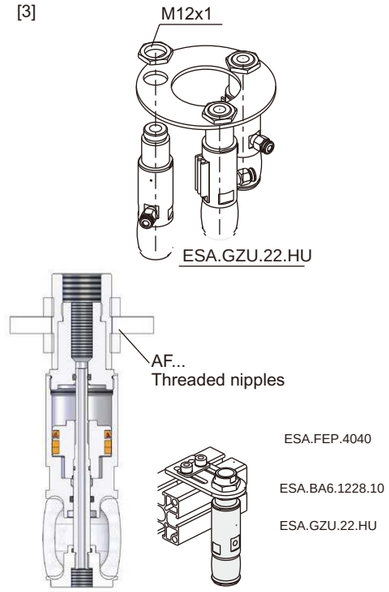

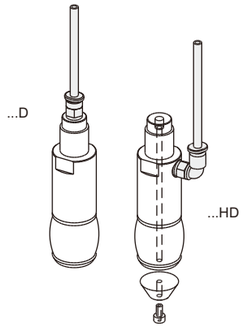

Compressed air feeding
The compressed air feeding the gripper must be filtered (5÷40 µm) but not necessarily lubricated.
The type of medium selected at the start – lubricated or not lubricated – must be kept for the complete service life of the gripper.
The pneumatic circuit must be pressurized progressively, to avoid uncontrolled movements.
The gripping force can be adjusted by suitably adjusting the air pressure.
The pressure range is 4÷8 bar.

(5÷40µm)

4÷8 bar

Caution
Avoid the gripper coming into contact with the following media: coolants which cause corrosion, grinding dust or glowing sparks.
Make sure that nobody can place his/her hand in the working area and there are no objects in the path of the gripper.
The gripper must not run before the whole machine, on which it is mounted, complies with the laws or safety norms of your country.

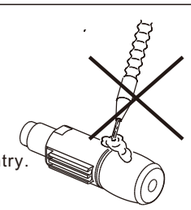

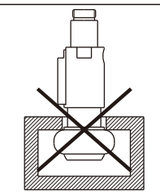

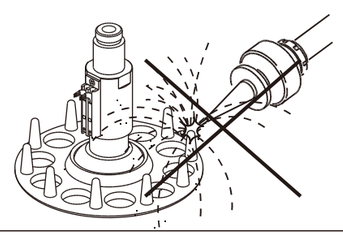

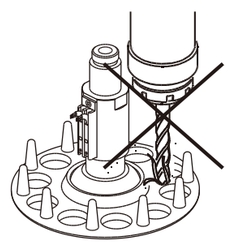

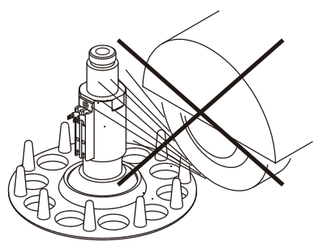

Needle Gripper

Cylinder push
Double action
Suitable for textite and food industry



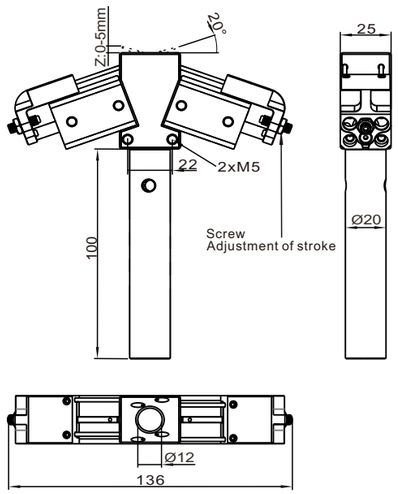

Needle Gripper

PN	0242687
Model	ESA.NGA.20.04

- 274g
- 4
- 2mm
- 0-10mm
- Weight 274g
- Number of needle 4
- Diameter of needle:2mm
- Stroke 0-10mm



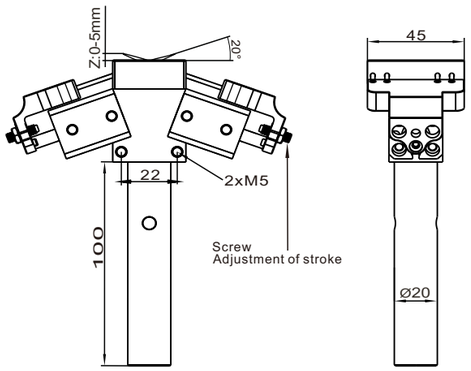

Needle Gripper

PN	0241358
Model	ESA.NGA.20.08

- 295g
- 8
- 2mm
- 0-10mm
- Weight 295g
- Number of needle 8
- Diameter of needle:2mm
- Stroke 0-10mm

Quick changer
Eoat components
Gripp components
Vacuum components
Fitting
AIR NIPPERS
STATIC SOLUTIONS

Needle Gripper

Cylinder push
Double action
Suitable for textite and food industry



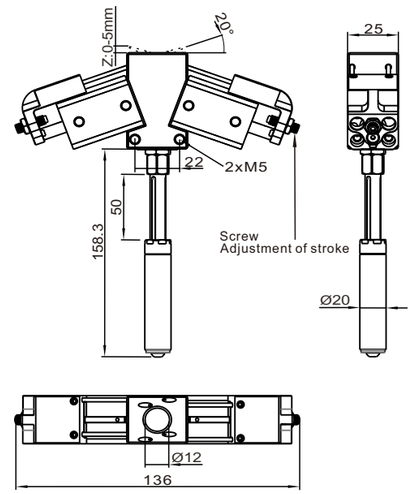

Needle Gripper

PN	0240207
Model	ESA.NGA.2050.04

- 295g
- 8
- 2mm
- 0-10mm
- 0-50mm
- Weight 295g
- Number of needle 8
- Diameter of needle:2mm
- Stroke 0-10mm
- Buffer stroke 0-50mm



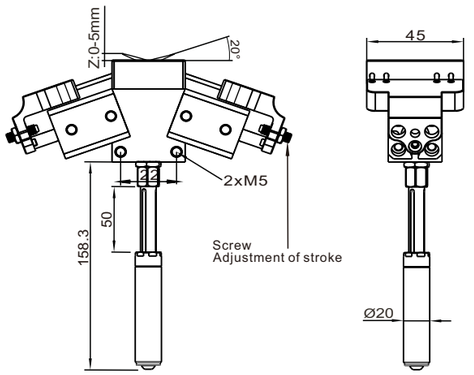

Needle Gripper

PN	0241242
Model	ESA.NGA.2050.08

- 295g
- 8
- 2mm
- 0-10mm
- 0-50mm
- Weight 295g
- Number of needle 8
- Diameter of needle:2mm
- Stroke 0-10mm
- Buffer stroke 0-50mm

Needle Gripper

PN / Model					
Weight	120g	160g	140g	212g	180g
Total gripping force	24N	26N	29N	38N	45N
Number of needle	24pins	24pins	36pins	36pins	48pins
Needle track distance	0-4.8 mm				
Stroke Z / Z	0-2.7mm Adjustment				
Diameter of needle	0.8mm				
Pressure range	0.2-0.7 MPa				

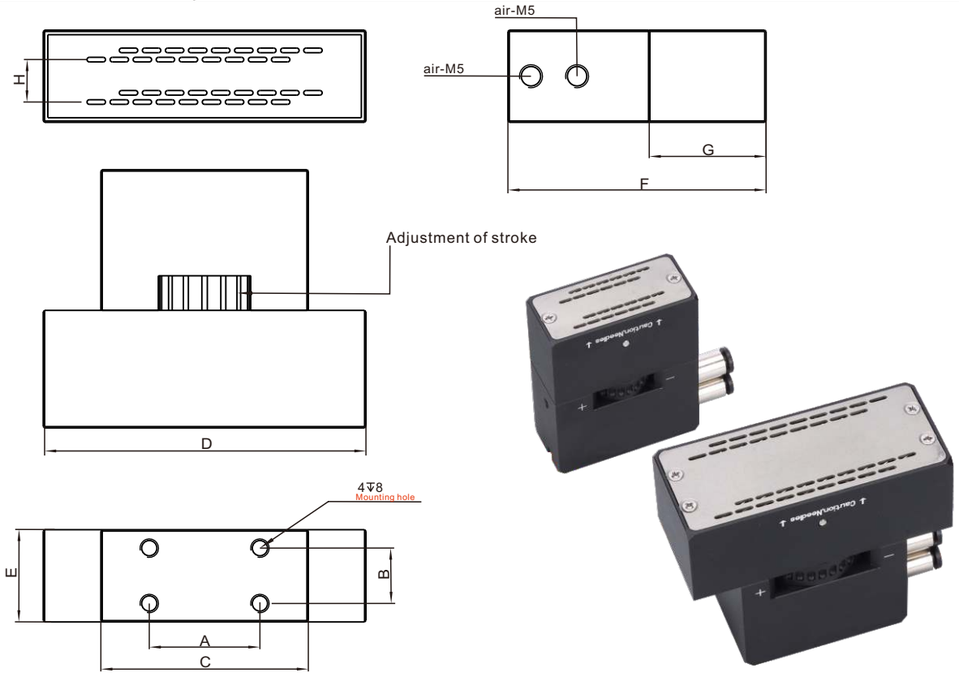

PN	Model	A [mm]	B [mm]	C [mm]	D [mm]	E [mm]	F [mm]	G [mm]	H [mm]	Weight
0244689	ESA.NGA.2045.24	24	12	45	45	20	56	25.5	9.2	120g
0245725	ESA.NGA.3045.24	25	20	45	45	30	58.5	25.5	9.2	160g
0247864	ESA.NGA.2070.36	24	12	45	70	20	56	25.5	9.2	140g
0247582	ESA.NGA.3070.36	25	20	45	70	30	59	25.5	9.2	212g
0244393	ESA.NGA.30120.48	25	20	45	120	30	59	25.5	9.2	248g

Needle Gripper

Gear drive, high precision
Double action
Suitable for textite and food industry
Food-grade grease.
Optional proximity magnetic sensors.



Needle Gripper

PN	0242946
Model	ESA.NGA.3093.04

- 188g — Weight 188g
- 4 — Number of needle 4
- 2mm — Diameter of needle:2mm
- 1-7mm — Stroke 1-7mm

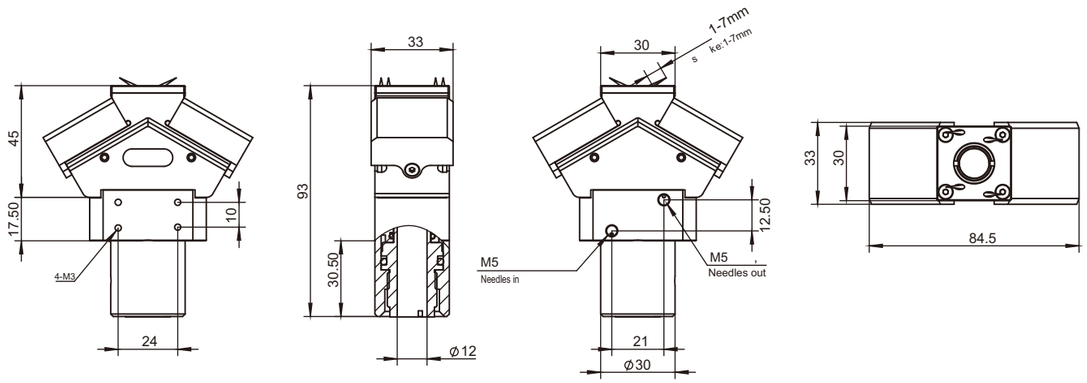

Vacuum cup suspensions

- Suspension normally used with vacuum cups to pick up parts & take out parts & move parts in plastic industry.
- New design internal structure offers more smoothly movement affection & more heavy duty load.
- spring structure to provide buffering, funetion to protect parts .
- Body & rod in hard anodized aluminum.
- Suspension normally be used with bracket to be mounted on aluminum profile or plate Base on special internal.

Model secltion

example ESA.VRC.1010.M5

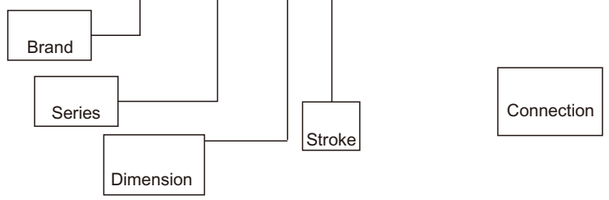



ESA.VRC ESA.VRT ESA.VNC ESA.VNT ESA.VEC ESA.VET ESA.VKC ESA.VKT



ESA.VGC ESA.VFC ESA.VHC ESA.VMT ESA.VQT

Vacuum cup suspensions

Telescopic suspensions

ESA.VSC
ESA.VST

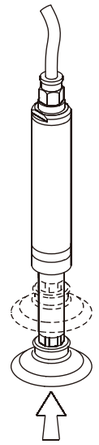

Through rod suspensions

ESA.VRC
ESA.VRT
ESA.VNC
ESA.VNT
ESA.VEC
ESA.VET
ESA.VKC
ESA.VKT
ESA.VZC
ESA.VGC
ESA.VFC
ESA.VHC
ESA.VMT
ESA.VQC

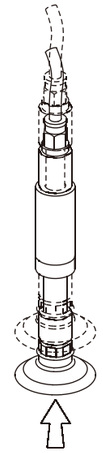

Suspensions with smooth body

ESA.VRC
ESA.VNC
ESA.VEC
ESA.VKC
ESA.VGC
ESA.VZC
ESA.VFC
ESA.VHC

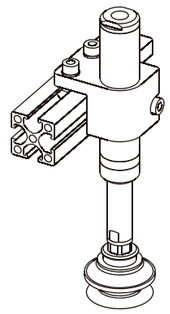

Suspensions with threaded body

ESA.VRT
ESA.VNT
ESA.VET
ESA.VKT
ESA.VMT
ESA.VQT

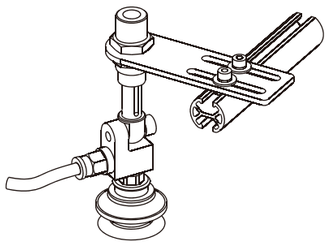

Non-rotative suspensions

ESA.VNC
ESA.VNT
ESA.VEC
ESA.VET
ESA.VKC
ESA.VKT
ESA.VGC
ESA.VHC
ESA.VZC

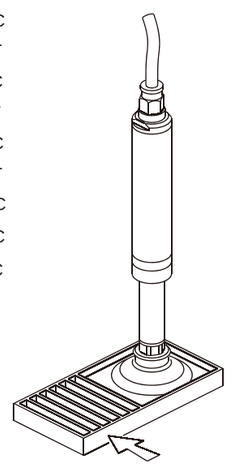

Rotative suspensions

ESA.VRC
ESA.VRT
ESA.VMT
ESA.VFC
ESA.VQT
ESA.VKT

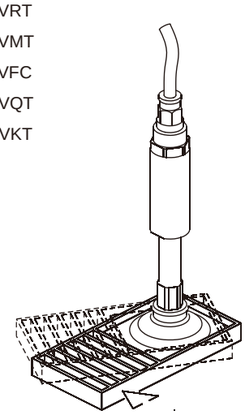

Vacuum cup suspensions

ESA.VRC series — Smooth-body rotative suspensions

ESA.VRC

Body and rod in anodized aluminum
Rotative rod
Pressure range -1÷8bar

-1÷8bar.

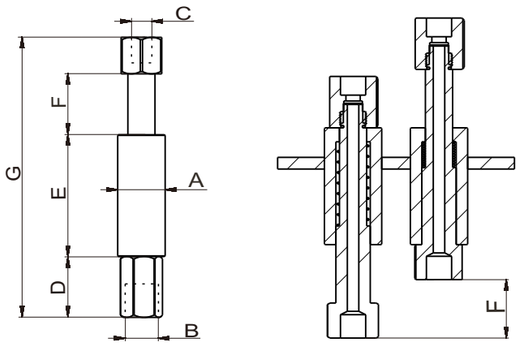



PN	Model	A [mm]	B [mm]	C [mm]	D [mm]	E [mm]	F [mm]	G [mm]	Weight
0241720	ESA.VRC.1010.M5	Ø10	M5	M5	18	22	10	55.5	11g
0240535	ESA.VRC.1020.M5	Ø10	M5	M5	18	41	20	84	17g
0240101	ESA.VRC.1420.G18	Ø14	G18	G18	20	40	20	92	23g
0242651	ESA.VRC.1435.G18	Ø14	G18	G18	20	60	35	127	40g
0243789	ESA.VRC.2025.G18	Ø20	G18	G18	22	50	25	112	50g
0244697	ESA.VRC.2050.G18	Ø20	G18	G18	22	84	50	171	77g

ESA.VRT series — Threaded-body rotative suspensions

ESA.VRT

Body and rod in anodized aluminum
rotative rod
Pressure range -1÷8bar

-1÷8bar.

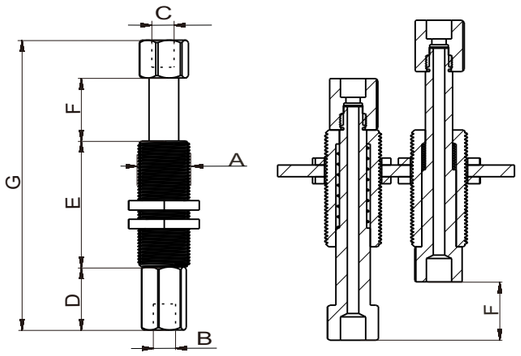



PN	Model	A [mm]	B [mm]	C [mm]	D [mm]	E [mm]	F [mm]	G [mm]	Weight
0243384	ESA.VRT.1010.M5	M10x1	M5	M5	18	22	10	55.5	14g
0249960	ESA.VRT.1020.M5	M10x1	M5	M5	18	41	20	84	26g
0241699	ESA.VRT.1420.G18	M14x1	G18	G18	20	40	20	92	32g
0243958	ESA.VRT.1435.G18	M14x1	G18	G18	20	60	35	127	36g
0249131	ESA.VRT.2025.G18	M20x1	G18	G18	22	50	25	112	70g
0244636	ESA.VRT.2050.G18	M20x1	G18	G18	22	84	50	171	104g

Vacuum cup suspensions

ESA.VNC series — Smooth-body non-rotative suspensions

ESA.VNC

Body and rod in anodized aluminum
Non-rotative rod
Pressure range -1÷8bar

-1÷8bar.

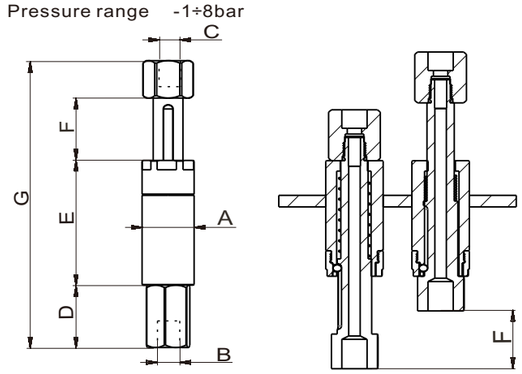



PN	Model	A [mm]	B [mm]	C [mm]	D [mm]	E [mm]	F [mm]	G [mm]	Weight
0244422	ESA.VNC.1010.M5	Ø10	M5	M5	18	22	10	60	15g
0248037	ESA.VNC.1020.M5	Ø10	M5	M5	18	41	20	89	20g
0242649	ESA.VNC.1420.G18	Ø14	G18	G18	20	40	20	92	30g
0249318	ESA.VNC.1435.G18	Ø14	G18	G18	20	60	35	127	50g
0247164	ESA.VNC.2025.G18	Ø20	G18	G18	22	50	25	112	54g
0241942	ESA.VNC.2050.G18	Ø20	G18	G18	22	84	50	171	80g

ESA.VNT series — Threaded-body non-rotative suspensions

ESA.VNT

Body and rod in anodized aluminum
Non-rotative rod
Pressure range -1÷8bar

-1÷8bar.

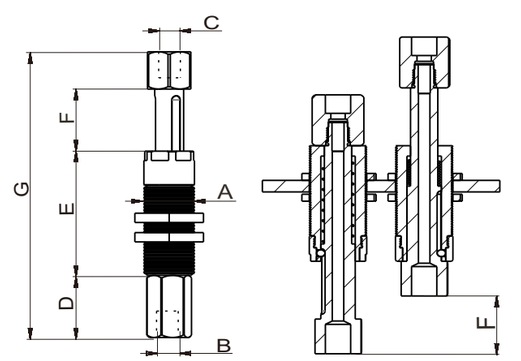



PN	Model	A [mm]	B [mm]	C [mm]	D [mm]	E [mm]	F [mm]	G [mm]	Weight
0247040	ESA.VNT.1010.M5	M10x1	M5	M5	18	22	10	60	18g
0240329	ESA.VNT.1020.M5	M10x1	M5	M5	18	41	20	84	23g
0244086	ESA.VNT.1420.G18	M14x1	G18	G18	20	40	20	92	51g
0243816	ESA.VNT.1435.G18	M14x1	G18	G18	20	60	35	127	72g
0245999	ESA.VNT.2025.G18	M20x1	G18	G18	22	50	25	112	82g
0242202	ESA.VNT.2050.G18	M20x1	G18	G18	22	84	50	171	120g

Vacuum cup suspensions

ESA.VEC series

Smooth-body non-rotative suspensions with integral elbow arms

ESA.VEC

It is possible to set continuously the angle between 0°and +/-90°.
Body and rod in anodized aluminum.
Non-rotative rod.
Pressure range -1÷8bar.

0° +/-90° .

-1÷8bar.

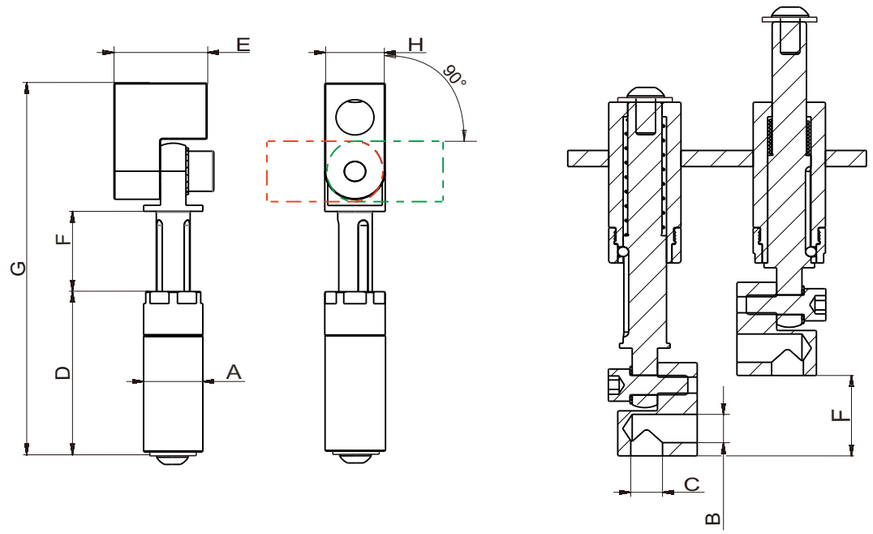



PN	Model	A [mm]	B [mm]	C [mm]	D [mm]	E [mm]	F [mm]	G [mm]	H [mm]	Weight
0244709	ESA.VEC.1010.M5	Ø10	M5	M5	22	11	10	53	10	18g
0245718	ESA.VEC.1020.M5	Ø10	M5	M5	41	11	20	81	10	23g
0241477	ESA.VEC.1420.G18	Ø14	G18	G18	40	22	20	93	14	45g
0244716	ESA.VEC.1435.G18	Ø14	G18	G18	60	22	35	128	14	48g
0242824	ESA.VEC.2025.G18	Ø20	G18	G18	50	22	25	111	14	70g
0242425	ESA.VEC.2050.G18	Ø20	G18	G18	84	22	50	169.5	14	105g

Vacuum cup suspensions

ESA.VET series

Threaded-body non-rotative suspensions with integral elbow arms

ESA.VET

It is possible to set continuously the angle between 0°and +/-90°.
Body and rod in anodized aluminum.
Non-rotative rod.
Pressure range -1÷8bar.

0° +/-90° .

-1÷8bar.

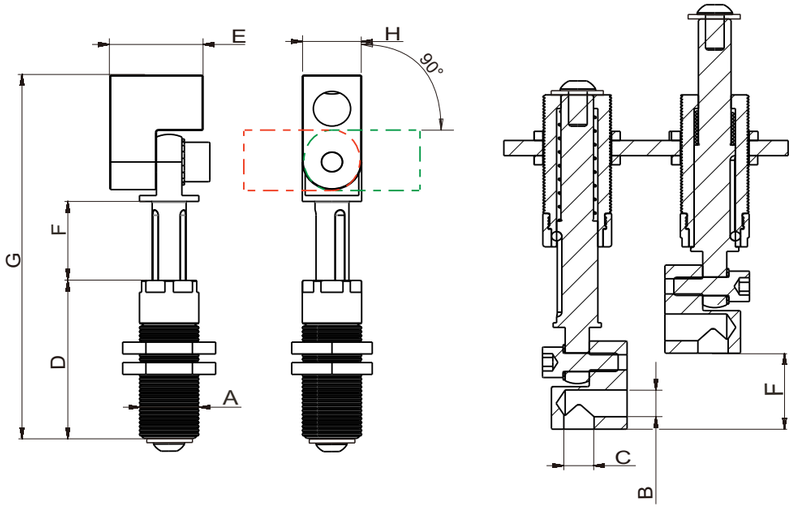



PN	Model	A [mm]	B [mm]	C [mm]	D [mm]	E [mm]	F [mm]	G [mm]	H [mm]	Weight
0247893	ESA.VET.1010.M5	M10x1	M5	M5	22	11	10	53	10	18g
0249608	ESA.VET.1020.M5	M10x1	M5	M5	41	11	20	81	10	23g
0244480	ESA.VET.1420.G18	M14x1	G18	G18	40	22	20	93	14	45g
0246689	ESA.VET.1435.G18	M14x1	G18	G18	60	22	35	128	14	48g
0248961	ESA.VET.2025.G18	M20x1	G18	G18	50	22	25	111	14	70g
0247325	ESA.VET.2050.G18	M20x1	G18	G18	84	22	50	169.5	14	105g

Vacuum cup suspensions

ESA.VKC series

Smooth-body non-rotative suspensions with adjustable clamp

ESA.VKC

It is possible to set continuously the angle between 0°and +/-90°.
Body and rod in anodized aluminum.
Non-rotative rod.
Pressure range -1÷8bar.

0° +/-90° .

-1÷8bar.

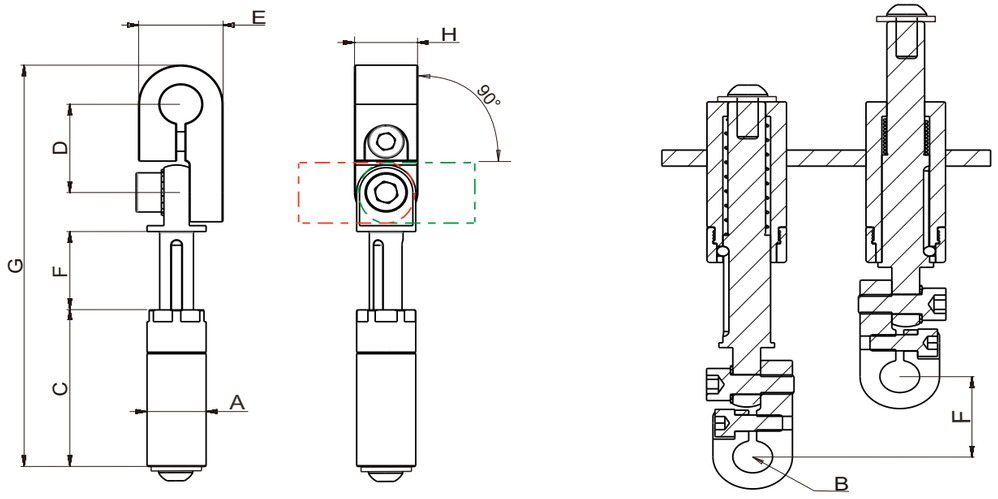



PN	Model	A [mm]	B [mm]	C [mm]	D [mm]	E [mm]	F [mm]	G [mm]	H [mm]	Weight
0241069	ESA.VKC.1420.08	Ø14	Ø8	40	22.5	20	20	97	23.6	36g
0240206	ESA.VKC.1420.10	Ø14	Ø10	40	22.5	20	20	97	23.6	35g
0241057	ESA.VKC.1420.12	Ø14	Ø12	40	22.5	20	20	97	23.6	34g
0245589	ESA.VKC.2025.14	Ø20	Ø14	50	22.5	20	25	120	23.6	72g
0245116	ESA.VKC.2025.20	Ø20	Ø20	50	25	27	25	125	27	90g
0244044	ESA.VKC.2050.20	Ø20	Ø20	84	25	27	50	180	27	125g

Vacuum cup suspensions

ESA.VKT series

Threaded-body non-rotative suspensions with adjustable clamp

ESA.VKT

It is possible to set continuously the angle between 0°and +/-90°.
Body and rod in anodized aluminum.
Non-rotative rod.
Pressure range -1÷8bar.

0° +/-90° .

-1÷8bar.

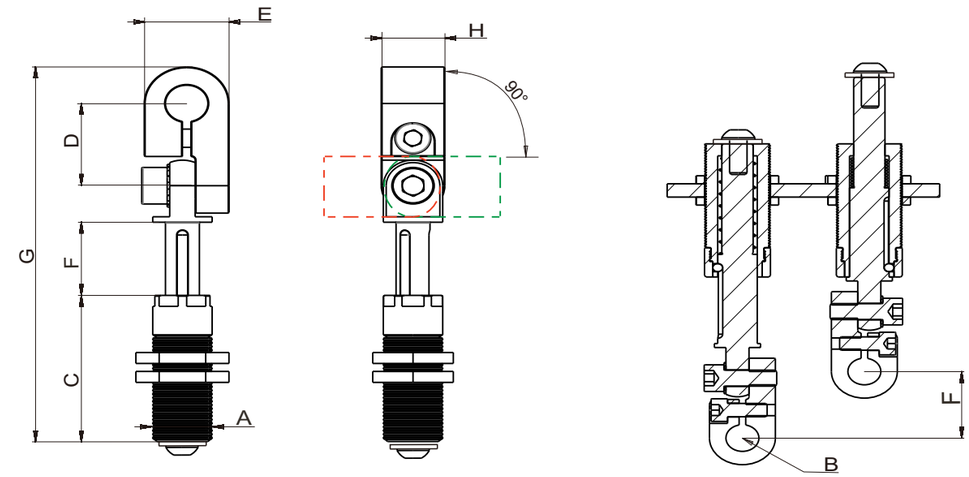



PN	Model	A [mm]	B [mm]	C [mm]	D [mm]	E [mm]	F [mm]	G [mm]	H [mm]	Weight
0244103	ESA.VKT.1420.08	M14x1	Ø8	40	22.5	20	20	97	23.6	36g
0245259	ESA.VKT.1420.10	M14x1	Ø10	40	22.5	20	20	97	23.6	35g
0242173	ESA.VKT.1420.12	M14x1	Ø12	40	22.5	20	20	97	23.6	34g
0247173	ESA.VKT.2025.14	M20x1	Ø14	50	22.5	20	25	120	23.6	72g
0244324	ESA.VKT.2025.20	M20x1	Ø20	50	25	27	25	125	27	90g
0248295	ESA.VKT.2050.20	M20x1	Ø20	84	25	27	50	180	27	125g

Vacuum cup suspensions

ESA.VGCseries

Smooth-body non-rotative pneumatic push suspensions

ESA.VGC

Body and rod in anodized aluminum
Telescopic lay-out:fittings and hoses don´t move
Non-rotative rod
Pressure range -1÷8bar

-1÷8bar.

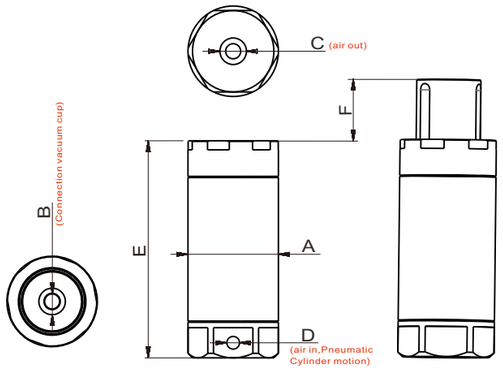



PN	Model	A [mm]	B [mm]	C [mm]	D [mm]	E [mm]	F [mm]	Weight
0244482	ESA.VGC.2010	Ø20	M5	M5	M5	50	10	35g
0248489	ESA.VGC.2020	Ø20	M5	M5	M5	65	20	45g
0248141	ESA.VGC.3020	Ø30	G18	G18	M5	72	20	70g
0242871	ESA.VGC.3030	Ø30	G18	G18	M5	84	30	85g

ESA.VFCseries

Smooth-body rotative suspensions

ESA.VFC

Body is steel,rod is aluminum.
Rotative rod.
Pressure range -1÷8bar.

-1÷8bar.

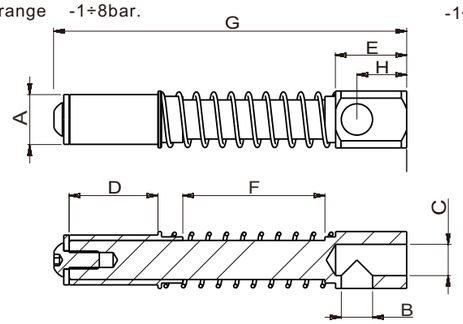



PN	Model	A [mm]	B [mm]	C [mm]	D [mm]	E [mm]	F [mm]	G [mm]	H [mm]	Weight
0246044	ESA.VFC.2014	Ø14	G18	G18	25	20	20	80	14	48g
0246132	ESA.VFC.4014	Ø14	G18	G18	25	20	40	100	14	136g
0241356	ESA.VFC.2020	Ø20	G18	G14	48	26	20	113	15	136g
0248595	ESA.VFC.4020	Ø20	G18	G14	48	26	20	133	15	136g

Vacuum cup suspensions

ESA.VHCseries

Smooth-body non-rotative suspensions

ESA.VHC

Body and rod in steel
Non-rotative rod
Pressure range -1÷8bar

-1÷8bar.

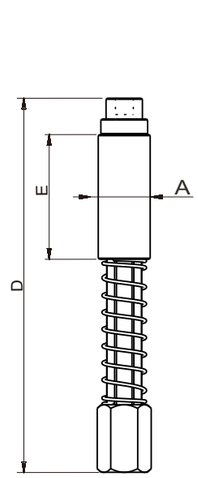

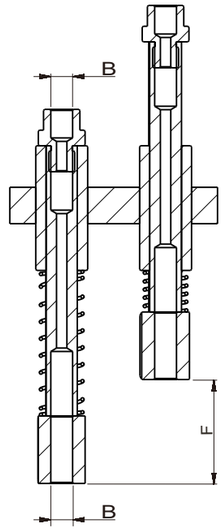



PN	Model	A [mm]	B [mm]	C [mm]	D [mm]	E [mm]	F [mm]	Weight
0240017	ESA.VHC.1020.M5	Ø10	M5	M5	72	24	20	25g
0240710	ESA.VHC.1220.M5	Ø12	M5	M5	72	24	20	30g

ESA.VMTseries

Threaded-body rotative suspensions

ESA.VMT

Body and rod in steel
rotative rod
Pressure range -1÷8bar

-1÷8bar.

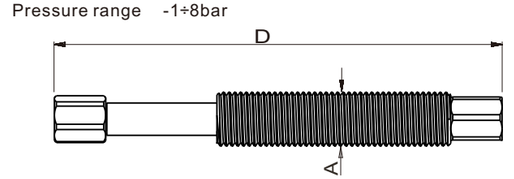

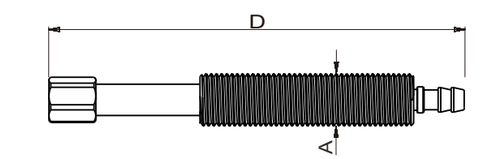

PN	Model	A [mm]	B [mm]	C [mm]	D [mm]	E [mm]	F [mm]	Weight
0240631	ESA.VMT.1020.06	M10x1	M5	-	80	41	20	27g
0244241	ESA.VMT.1020.M5	M10x1	M5	M5	78.5	41	20	30g
0245172	ESA.VMT.1030.M5	M10x1	M5	M5	98.5	51	30	40g

Vacuum cup suspensions

ESA.VQCseries

Threaded-body rotative suspensions

ESA.VQC

Body and rod in steel
Rotative rod
Pressure range -1÷8bar
Suitable for heavy load

-1÷8bar.

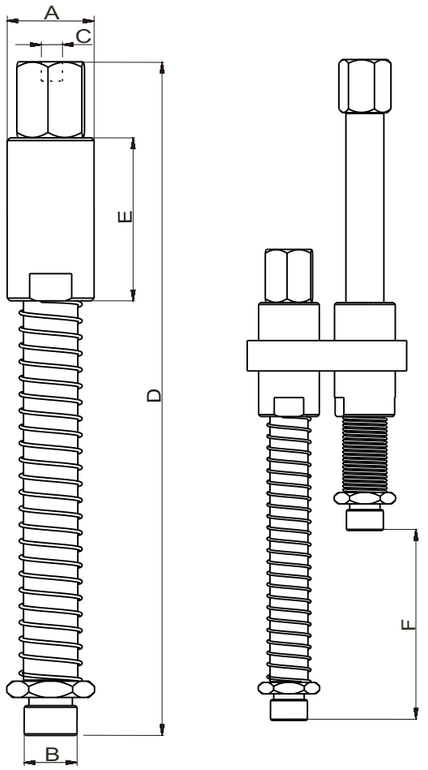



PN	Model	A [mm]	B [mm]	C [mm]	D [mm]	E [mm]	F [mm]	Weight
0241466	ESA.VQC.1650.G18	M16x1	G1/8	G1/8	124	30	50	110g
0242195	ESA.VQC.3025.G14	M30x1.5	G1/4	G3/8	117	53	25	400g
0240557	ESA.VQC.3075.G14	M30x1.5	G1/4	G3/8	187	53	75	530g

Vacuum cup suspensions

ESA.VZCseries

Non-rotative heavy duty stainless suspensions

ESA.VZC

Body and rod in steel
Ball bearing for a very high load capability.
Zero backlash.
food-grade grease.
Pressure range -1÷8bar

-1÷8bar.

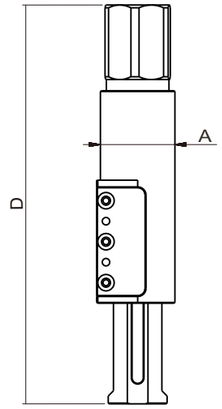

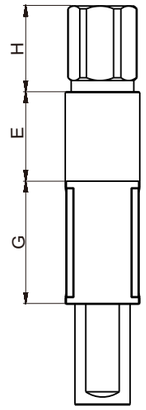

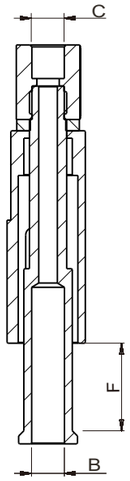

PN	Model	A [mm]	B [mm]	C [mm]	D [mm]	E [mm]	F [mm]	G [mm]	H [mm]	Weight
0245699	ESA.VZC.1010.M5	Ø10	M5	M5	63	12	10	23.5	15	30g
0243960	ESA.VZC.1025.M5	Ø10	M5	M5	100.5	23	25	35	15	45g
0244987	ESA.VZC.1420.G18	Ø14	G18	G18	99	21	20	31	20	80g
0243853	ESA.VZC.1435.G18	Ø14	G18	G18	137	32	35	43	20	110g
0243294	ESA.VZC.2025.G18	Ø20	G18	G18	107	24	25	33	20	150g
0241228	ESA.VZC.2050.G18	Ø20	G18	G18	169	43.5	50	50.5	20	235g

Vacuum cup

Bellows Suction Cups (Round)

SI

HT1



NBR



Bright spot
Sizes and materials available in a variety of specifications;
Seal lip soft and taper;
Multilayer corrugated structure;
The top of the sucker has a reinforcement structure.

advantage
Suitable for workpieces of different sizes and shapes;
Strong adaptability to curved surfaces and uneven workpieces ;
Compensation workpiece height difference,
good cushioning performance when touching workpiece;
When moving at high speed, it has a strong
horizontal and lateral grasping force.

Model Example	Ø Diameter Ø	Material	Connection
FGA.11.H.Ht1	12	Ht1	No fitting
FSGA.14.H.HT1.M5.IG	14	Ht1	M5.IG M5
FGA.~.H(1.5		NBR	M5.AG (AG = male (M))
FSGA.~.H(1.5		SI	G1/8.AG
FG.~.H(2.5			G1/8.IG (IG = female (F))
FSG.~.H(2.5			G1/4.AG
			G1/4.IG

FGA.~.H(1.5

Technical Data Bellows Suction Cups FGA.~.H (1.5 Folds)

Type	Suction force [N]*	Pull-off force [N]*	Volume [cm³]	Min. curve radius [mm] (convex)	Recommended internal hose diameter d [mm]***	Temperature range
FGA.11.H	0.95	3.8	0.225	10	4	0-200℃
FGA.14.H	1.20	5.0	0.420	13	4	0-200℃
FGA.16.H	2.30	6.7	0.750	20	4	0-200℃
FGA.20.H	4.70	10.7	1.150	30	4	0-200℃
FGA.22.H	5.70	15.2	1.400	25	4	0-200℃
FGA.25.H	5.30	17.3	3.150	20	4	0-200℃
FGA.33.H	13.60	39.6	4.750	40	6	0-200℃
FGA.43.H	22.80	64.5	11.445	60	6	0-200℃
FGA.53.H	51.30	95.0	26.488	75	6	0-200℃
FGA.63.H	85.00	135.0	43.829	75	6	0-200℃

* -0.6 bar

*The specified suction forces are theoretical values at a vacuum of -0.6 bar and with a smooth, dry workpiece surface - they do not include a safety factor.

Quick changer
Eoat components
Gripp components
Vacuum components
Fitting
AIR NIPPERS
STATIC SOLUTIONS

Vacuum cup

FGA-H 11 Series

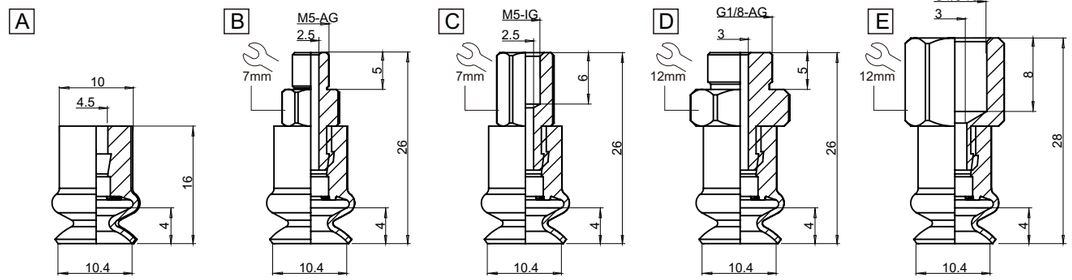

Vacuum cup information

Drawing	Model	PN	Fitting	
A	FGA.11.H.HT1	0245533	—	
	FGA.11.H.SI	0247674		
	FGA.11.H.NBR	0247946		
B	FSGA.11.H.HT1.M5.AG	0241425	FT.M5.M.E7	
	FSGA.11.H.SI.M5.AG	0244980		
	FSGA.11.H.NBR.M5.AG	0241709		
C	FSGA.11.H.HT1.M5.IG	0241214	FT.M5.F.E7	
	FSGA.11.H.SI.M5.IG	0247998		
	FSGA.11.H.NBR.M5.IG	0248623		
D	FSGA.11.H.HT1.G1/8.AG	0243194	FT.G1/8.M.E12	
	FSGA.11.H.SI.G1/8.AG	0242015		
	FSGA.11.H.NBR.G1/8.AG	0242328		
E	FSGA.11.H.HT1.G1/8.IG	0247940	FT.G1/8.F.E12	
	FSGA.11.H.SI.G1/8.IG	0240821		
	FSGA.11.H.NBR.G1/8.IG	0244896		

FGA-H 14 Series

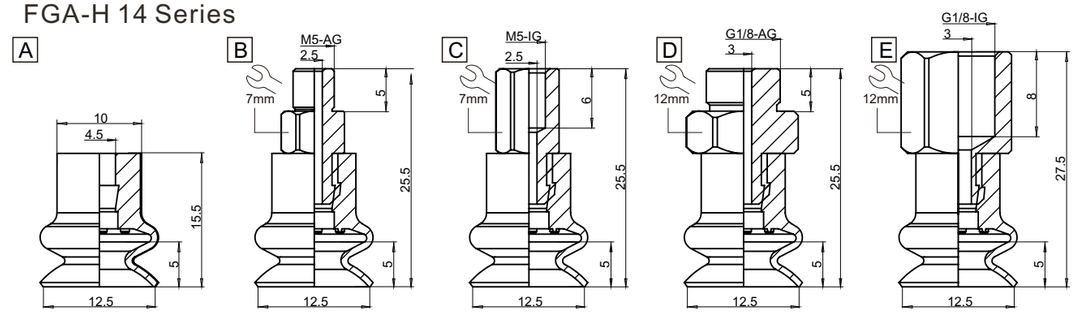

Vacuum cup information

Drawing	Model	PN	Fitting	
A	FGA.14.H.HT1	0248893	—	
	FGA.14.H.SI	0245122		
	FGA.14.H.NBR	0241146		
B	FSGA.14.H.HT1.M5.AG	0240822	FT.M5.M.E7	
	FSGA.14.H.SI.M5.AG	0242923		
	FSGA.14.H.NBR.M5.AG	0240102		
C	FSGA.14.H.HT1.M5.IG	0247486	FT.M5.F.E7	
	FSGA.14.H.SI.M5.IG	0240455		
	FSGA.14.H.NBR.M5.IG	0240559		
D	FSGA.14.H.HT1.G1/8.AG	0240092	FT.G1/8.M.E12	
	FSGA.14.H.SI.G1/8.AG	0241338		
	FSGA.14.H.NBR.G1/8.AG	0249937		
E	FSGA.14.H.Ht1.G1/8.IG	0241500	FT.G1/8.F.E12	
	FSGA.14.H.SI.G1/8.IG	0241607		
	FSGA.14.H.NBR.G1/8.IG	0246275		

Vacuum cup

FGA-H.16 Series

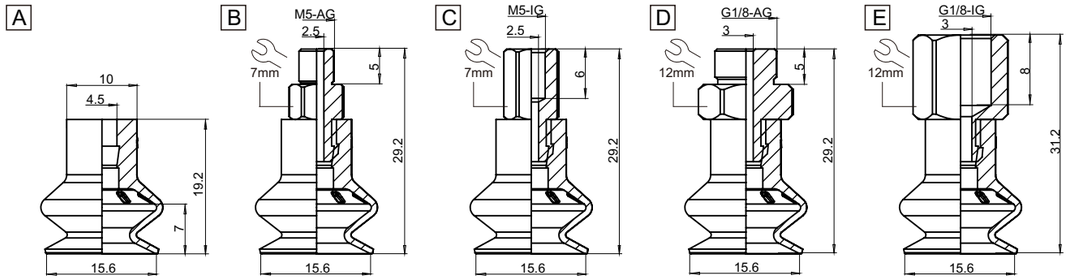

Vacuum cup information

Drawing	Model	PN	Fitting	
A	FGA.16.H.HT1	0249168	—	
	FGA.16.H.SI	0244170		
	FGA.16.H.NBR	0245003		
B	FSGA.16.H.HT1.M5.AG	0242590	FT.M5.M.E7	
	FSGA.16.H.SI.M5.AG	0243372		
	FSGA.16.H.NBR.M5.AG	0241504		
C	FSGA.16.H.HT1.M5.IG	0245049	FT.M5.F.E7	
	FSGA.16.H.SI.M5.IG	0242465		
	FSGA.16.H.NBR.M5.IG	0240437		
D	FSGA.16.H.HT1.G1/8.AG	0242733	FT.G1/8.M.E12	
	FSGA.16.H.SI.G1/8.AG	0246589		
	FSGA.16.H.NBR.G1/8.AG	0244662		
E	FSGA.16.H.HT1.G1/8.IG	0245889	FT.G1/8.F.E12	
	FSGA.16.H.SI.G1/8.IG	0242745		
	FSGA.16.H.NBR.G1/8.IG	0246933		

FGA-H.20 Series

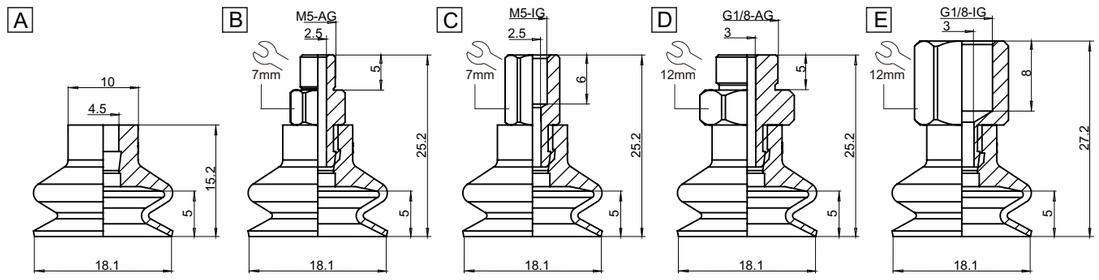

Vacuum cup information

Drawing	Model	PN	Fitting	
A	FGA.20.H.HT1	0244597	—	
	FGA.20.H.SI	0242562		
	FGA.20.H.NBR	0245174		
B	FSGA.20.H.HT1.M5.AG	0249695	FT.M5.M.E7	
	FSGA.20.H.SI.M5.AG	0243432		
	FSGA.20.H.NBR.M5.AG	0247193		
C	FSGA.20.H.HT1.M5.IG	0240373	FT.M5.F.E7	
	FSGA.20.H.SI.M5.IG	0249315		
	FSGA.20.H.NBR.M5.IG	0241422		
D	FSGA.20.H.HT1.G1/8.AG	0245179	FT.G1/8.M.E12	
	FSGA.20.H.SI.G1/8.AG	0243050		
	FSGA.20.H.NBR.G1/8.AG	0243885		
E	FSGA.20.H.HT1.G1/8.IG	0242410	FT.G1/8.F.E12	
	FSGA.20.H.SI.G1/8.IG	0240613		
	FSGA.20.H.NBR.G1/8.IG	0244043		

Vacuum cup

FGA-H.22 Series

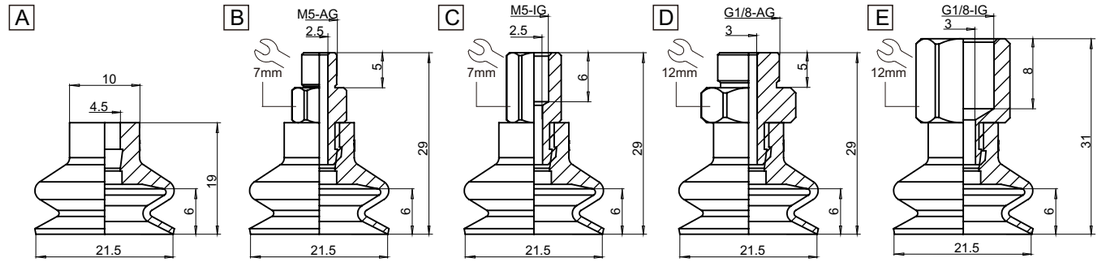

Vacuum cup information

Drawing	Model	PN	Fitting	
A	FGA.22.H.HT1	0241510	—	
	FGA.22.H.SI	0240212		
	FGA.22.H.NBR	0247679		
B	FSGA.22.H.HT1.M5.AG	0243933	FT.M5.M.E7	
	FSGA.22.H.SI.M5.AG	0241084		
	FSGA.22.H.NBR.M5.AG	0246268		
C	FSGA.22.H.HT1.M5.IG	0247678	FT.M5.F.E7	
	FSGA.22.H.SI.M5.IG	0241936		
	FSGA.22.H.NBR.M5.IG	0245574		
D	FSGA.22.H.HT1.G1/8.AG	0249802	FT.G1/8.M.E12	
	FSGA.22.H.SI.G1/8.AG	0248563		
	FSGA.22.H.NBR.G1/8.AG	0247320		
E	FSGA.22.H.HT1.G1/8.IG	0247801	FT.G1/8.F.E12	
	FSGA.22.H.SI.G1/8.IG	0240478		
	FSGA.22.H.NBR.G1/8.IG	0246968		

FGA-H.25 Series

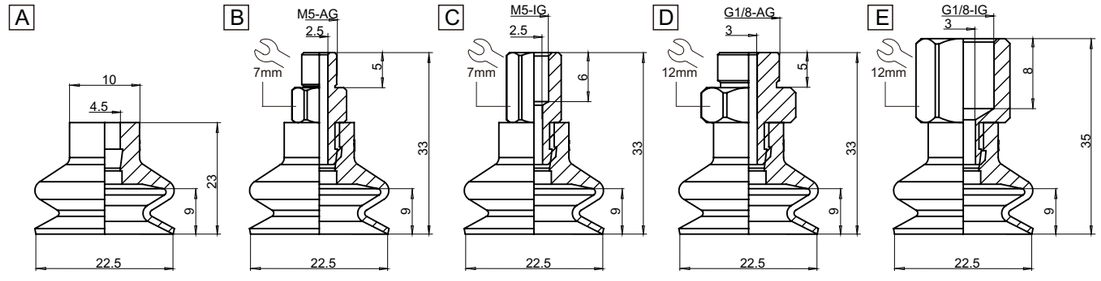

Vacuum cup information

Drawing	Model	PN	Fitting	
A	FGA.25.H.HT1	0243311	—	
	FGA.25.H.SI	0248719		
	FGA.25.H.NBR	0243555		
B	FSGA.25.H.HT1.M5.AG	0242738	FT.M5.M.E7	
	FSGA.25.H.SI.M5.AG	0243491		
	FSGA.25.H.NBR.M5.AG	0247545		
C	FSGA.25.H.HT1.M5.IG	0245967	FT.M5.F.E7	
	FSGA.25.H.SI.M5.IG	0240713		
	FSGA.25.H.NBR.M5.IG	0248313		
D	FSGA.25.H.HT1.G1/8.AG	0244367	FT.G1/8.M.E12	
	FSGA.25.H.SI.G1/8.AG	0246518		
	FSGA.25.H.NBR.G1/8.AG	0248504		
E	FSGA.25.H.HT1.G1/8.IG	0249105	FT.G1/8.F.E12	
	FSGA.25.H.SI.G1/8.IG	0242005		
	FSGA.25.H.NBR.G1/8.IG	0246067		

Vacuum cup

FGA-H.33 Series

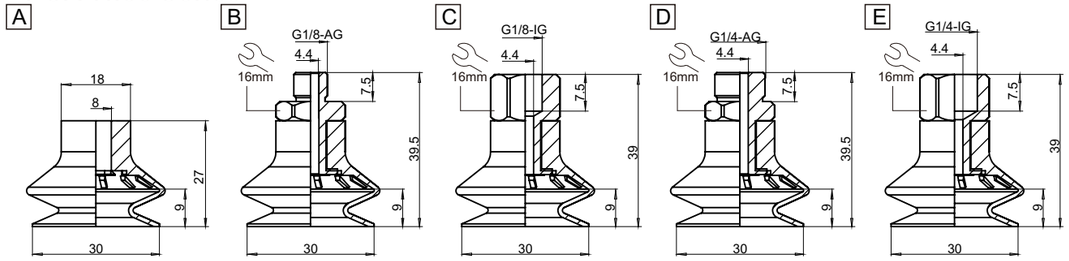

Vacuum cup information

Drawing	Model	PN	Fitting	
A	FGA.33.H.HT1	0244968	—	
	FGA.33.H.SI	0246881		
	FGA.33.H.NBR	0249665		
B	FSGA.33.H.HT1.G1/8.AG	0242623	FT.G1/8.M.E16	
	FSGA.33.H.SI.G1/8.AG	0249200		
	FSGA.33.H.NBR.G1/8.AG	0244991		
C	FSGA.33.H.HT1.G1/8.IG	0245425	FT.G1/8.F.E16	
	FSGA.33.H. SI.G1/8.IG	0247566		
	FSGA.33.H.NBR.G1/8.IG	0240182		
D	FSGA.33.H.HT1.G1/4.AG	0247103	FT.G1/4.M.E16	
	FSGA.33.H.SI.G1/4.AG	0246406		
	FSGA.33.H.NBR.G1/4.AG	0245177		
E	FSGA.33.H.HT1.G1/4.IG	0242992	FT.G1/4.F.E16	
	FSGA.33.H.SI.G1/4.IG	0241407		
	FSGA.33.H.NBR.G1/4.IG	0244669		

FGA-H.43 Series

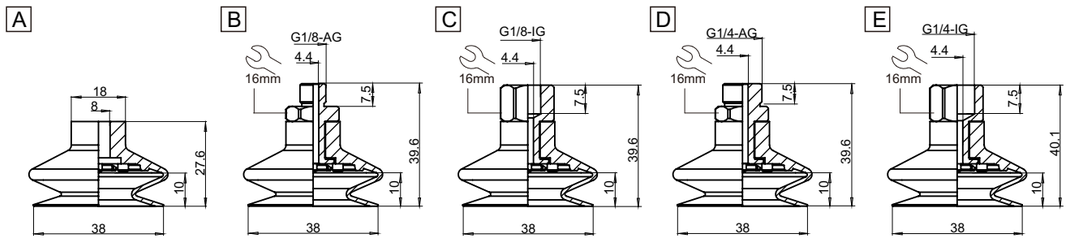

Vacuum cup information

Drawing	Model	PN	Fitting	
A	FGA.43.H.HT1	0248743	—	
	FGA.43.H.SI	0246816		
	FGA.43.H.NBR	0246080		
B	FSGA.43.H.HT1.G1/8.AG	0244715	FT.G1/8.M.E16	
	FSGA.43.H.SI.G1/8.AG	0248910		
	FSGA.43.H.NBR.G1/8.AG	0247900		
C	FSGA.43.H.HT1.G1/8.IG	0240577	FT.G1/8.F.E16	
	FSGA.43.H.SI.G1/8.IG	0240484		
	FSGA.43.H.NBR.G1/8.IG	0246320		
D	FSGA.43.H.HT1.G1/4.AG	0244014	FT.G1/4.M.E16	
	FSGA.43.H.SI.G1/4.AG	0249707		
	FSGA.43.H.NBR.G1/4.AG	0243173		
E	FSGA.43.H.HT1.G1/4.IG	0240513	FT.G1/4.F.E16	
	FSGA.43.H.SI.G1/4.IG	0247159		
	FSGA.43.H.NBR.G1/4.IG	0245597		

Vacuum cup

FGA-H.53 Series

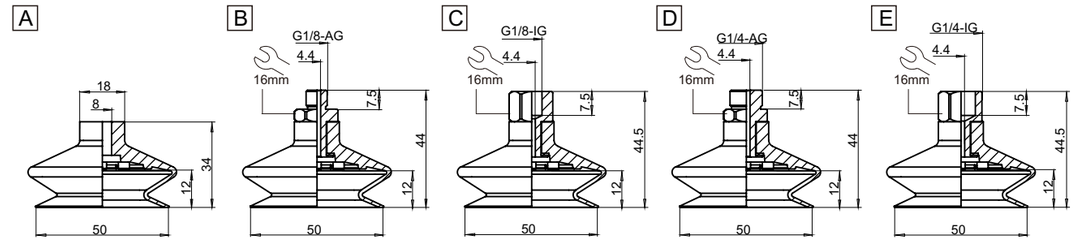

Vacuum cup information

Drawing	Model	PN	Fitting	
A	FGA.53.H.HT1	0242031	—	
	FGA.53.H.SI	0246862		
	FGA.53.H.NBR	0241845		
B	FSGA.53.H.HT1.G1/8.AG	0242840	FT.G1/8.M.E16	
	FSGA.53.H.SI.G1/8.AG	0248898		
	FSGA.53.H.NBR.G1/8.AG	0242975		
C	FSGA.53.H.HT1.G1/8.IG	0245873	FT.G1/8.F.E16	
	FSGA.53.H. SI.G1/8.IG	0246160		
	FSGA.53.H.NBR.G1/8.IG	0245230		
D	FSGA.53.H.HT1.G1/4.AG	0247602	FT.G1/4.M.E16	
	FSGA.53.H.SI.G1/4.AG	0243615		
	FSGA.53.H.NBR.G1/4.AG	0240561		
E	FSGA.53.H.HT1.G1/4.IG	0241638	FT.G1/4.F.E16	
	FSGA.53.H.SI.G1/4.IG	0242042		
	FSGA.53.H.NBR.G1/4.IG	0241800		

FGA-H.63 Series

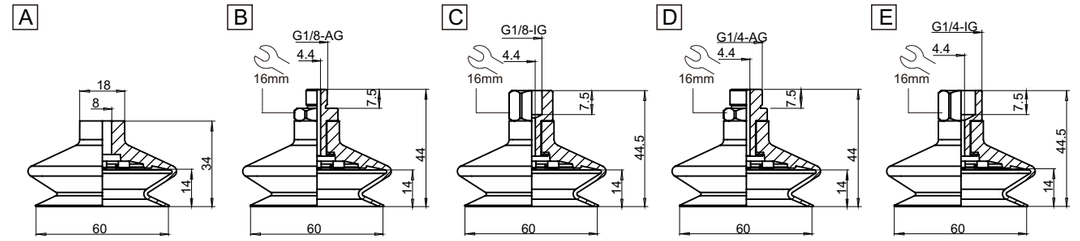

Vacuum cup information

Drawing	Model	PN	Fitting	
A	FGA.63.H.HT1	0243989	—	
	FGA.63.H.SI	0249911		
	FGA.63.H.NBR	0244051		
B	FSGA.63.H.HT1.G1/8.AG	0247787	FT.G1/8.M.E16	
	FSGA.63.H.SI.G1/8.AG	0242484		
	FSGA.63.H.NBR.G1/8.AG	0247552		
C	FSGA.63.H.HT1.G1/8.IG	0244244	FT.G1/8.F.E16	
	FSGA.63.H.SI.G1/8.IG	0240355		
	FSGA.63.H.NBR.G1/8.IG	0247839		
D	FSGA.63.H.HT1.G1/4.AG	0244810	FT.G1/4.M.E16	
	FSGA.63.H.SI.G1/4.AG	0245005		
	FSGA.63.H.NBR.G1/4.AG	0242978		
E	FSGA.63.H.HT1.G1/4.IG	0247755	FT.G1/4.F.E16	
	FSGA.63.H.SI.G1/4.IG	0244205		
	FSGA.63.H.NBR.G1/4.IG	0241890		

Vacuum cup

FG.~.H(2.5

Technical Data Bellows Suction Cups FG.~.H (2.5 Folds)

Type	Suction force [N]*	Pull-off force [N]*	Volume [cm³]	Min. curve radius [mm] (convex)	Recommended internal hose diameter d [mm]***	Temperature range
FG.12.H	0.9	3.5	0.600	13	4	0-200℃
FG.14.H	1.2	5.7	0.975	15	4	0-200℃
FG.18.H	2.3	8.5	1.350	20	4	0-200℃
FG.20.H	3.8	12.1	2.000	30	4	0-200℃
FG.25.H	4.5	19.0	5.400	30	4	0-200℃
FG.32.H	12.0	36.9	10.000	35	6	0-200℃
FG.42.H	13.6	44.0	19.786	75	6	0-200℃
FG.52.H	27.0	96.0	37.587	75	6	0-200℃
FG 62-H	39.6	137.0	72.500	75	6	0-200℃

* -0.6 bar

*The specified suction forces are theoretical values at a vacuum of -0.6 bar and with a smooth, dry workpiece surface - they do not include a safety factor.

FG.12.H Series

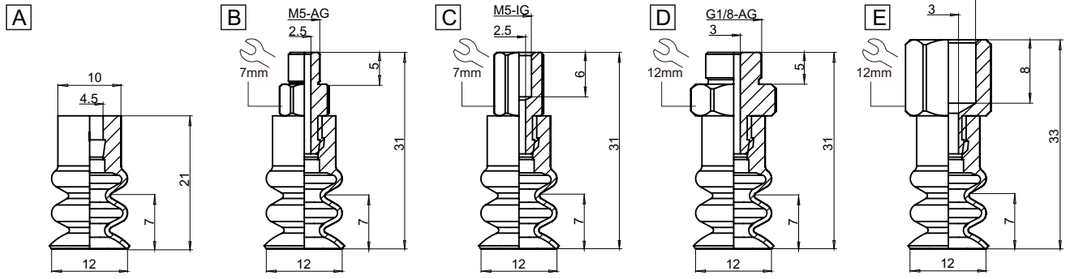

Vacuum cup information

Drawing	Model	PN	Fitting	
A	FG.12.H.HT1	0249610	—	
	FG.12.H.SI	0248497		
	FG.12.H.NBR	0242568		
B	FSG.12.H.HT1.M5.AG	0247537	FT.M5.M.E7	
	FSG.12.H.SI.M5.AG	0242963		
	FSG.12.H.NBR.M5.AG	0240052		
C	FSG.12.H.HT1.M5.IG	0245564	FT.M5.F.E7	
	FSG.12.H.SI.M5.IG	0248070		
	FSG.12.H.NBR.M5.IG	0245292		
D	FSG.12.H.HT1.G1/8.AG	0243780	FT.G1/8.M.E12	
	FSG.12.H.SI.G1/8.AG	0244732		
	FSG.12.H.NBR.G1/8.AG	0242006		
E	FSG.12.H.HT1.G1/8.IG	0241673	FT.G1/8.F.E12	
	FSG.12.H.SI.G1/8.IG	0242580		
	FSG.12.H.NBR.G1/8.IG	0247007		

Vacuum cup

FG.14.H Series

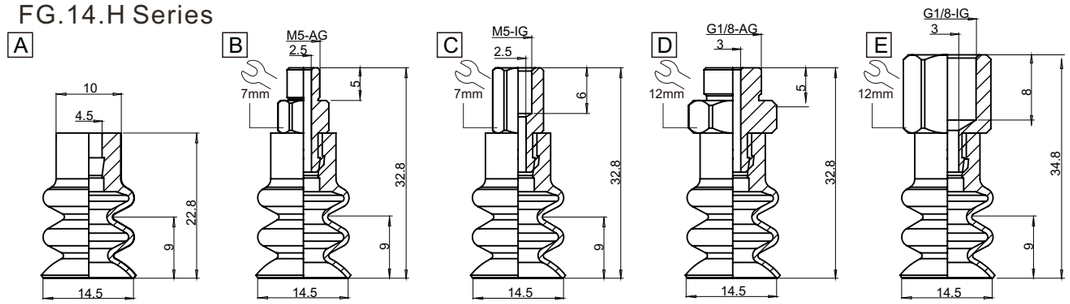

Vacuum cup information

Drawing	Model	PN	Fitting	
A	FG.14.H.HT1	0241658	—	
	FG.14.H.SI	0245785		
	FG.14.H.NBR	0243536		
B	FSG.14.H.HT1.M5.AG	0246757	FT.M5.M.E7	
	FSG.14.H.SI.M5.AG	0247047		
	FSG.14.H.NBR.M5.AG	0248194		
C	FSG.14.H.HT1.M5.IG	0243080	FT.M5.F.E7	
	FSG.14.H.SI.M5.IG	0240315		
	FSG.14.H.NBR.M5.IG	0242305		
D	FSG.14.H.HT1.G1/8.AG	0247129	FT.G1/8.M.E12	
	FSG.14.H.SI.G1/8.AG	0244645		
	FSG.14.H.NBR.G1/8.AG	0243005		
E	FSG.14.H.HT1.G1/8.IG	0244581	FT.G1/8.F.E12	
	FSG.14.H.SI.G1/8.IG	0241769		
	FSG.14.H.NBR.G1/8.IG	0248823		

FG.18.H Series

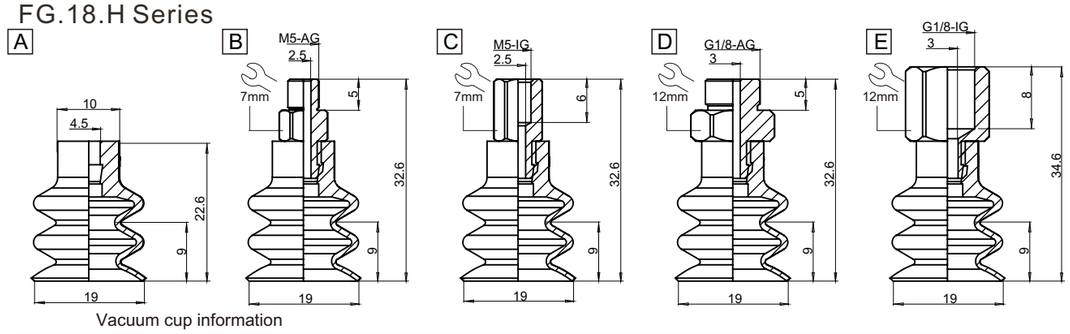

Vacuum cup information

Drawing	Model	PN	Fitting	
A	FG.18.H.HT1	0248677	—	
	FG.18.H.SI	0245447		
	FG.18.H.NBR	0248021		
B	FSG.18.H.HT1.M5.AG	0246020	FT.M5.M.E7	
	FSG.18.H.SI.M5.AG	0241739		
	FSG.18.H.NBR.M5.AG	0244807		
C	FSG.18.H.HT1.M5.IG	0246799	FT.M5.F.E7	
	FSG.18.H.SI.M5.IG	0241611		
	FSG.18.H.NBR.M5.IG	0241687		
D	FSG.18.H.HT1.G1/8.AG	0247300	FT.G1/8.M.E12	
	FSG.18.H.SI.G1/8.AG	0244812		
	FSG.18.H.NBR.G1/8.AG	0243600		
E	FSG.18.H.HT1.G1/8.IG	0240135	FT.G1/8.F.E12	
	FSG.18.H.SI.G1/8.IG	0241207		
	FSG.18.H.NBR.G1/8.IG	0247838		

Vacuum cup

FG.20.H Series

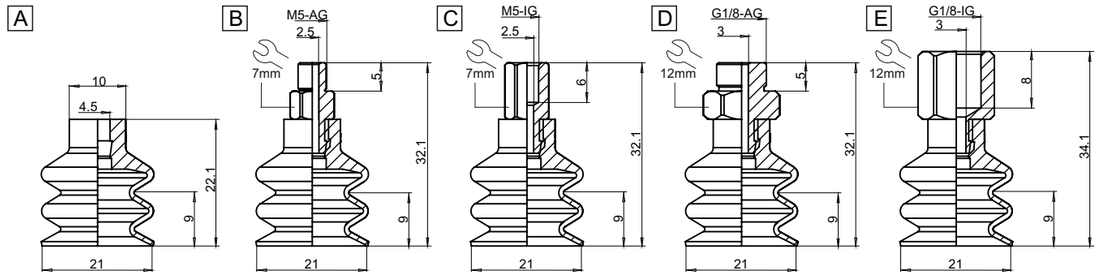

Vacuum cup information

Drawing	Model	PN	Fitting	
A	FG.20.H.HT1	0242775	—	
	FG.20.H.SI	0240347		
	FG.20.H.NBR	0249860		
B	FSG.20.H.HT1.M5.AG	0246512	FT.M5.M.E7	
	FSG.20.H.SI.M5.AG	0245361		
	FSG.20.H.NBR.M5.AG	0249270		
C	FSG.20.H.HT1.M5.IG	0245543	FT.M5.F.E7	
	FSG.20.H.SI.M5.IG	0244599		
	FSG.20.H.NBR.M5.IG	0248181		
D	FSG.20.H.HT1.G1/8.AG	0242064	FT.G1/8.M.E12	
	FSG.20.H.SI.G1/8.AG	0245906		
	FSG.20.H.NBR.G1/8.AG	0249784		
E	FSG.20.H.HT1.G1/8.IG	0246308	FT.G1/8.F.E12	
	FSG.20.H.SI.G1/8.IG	0242861		
	FSG.20.H.NBR.G1/8.IG	0246950		

FG.25.H Series

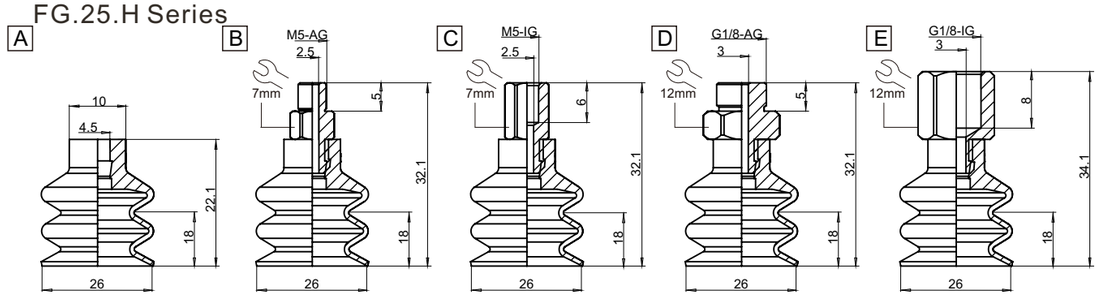

Vacuum cup information

Drawing	Model	PN	Fitting	
A	FG.25.H.HT1	0243224	—	
	FG.25.H.SI	0245651		
	FG.25.H.NBR	0243997		
B	FSG.25.H.HT1.M5.AG	0243953	FT.M5.M.E7	
	FSG.25.H.SI.M5.AG	0243476		
	FSG.25.H.NBR.M5.AG	0243609		
C	FSG.25.H.HT1.M5.IG	0246483	FT.M5.F.E7	
	FSG.25.H.SI.M5.IG	0249915		
	FSG.25.H.NBR.M5.IG	0247831		
D	FSG.25.H.HT1.G1/8.AG	0246328	FT.G1/8.M.E12	
	FSG.25.H.SI.G1/8.AG	0243475		
	FSG.25.H.NBR.G1/8.AG	0245994		
E	FSG.25.H.HT1.G1/8.IG	0240933	FT.G1/8.F.E12	
	FSG.25.H.SI.G1/8.IG	0243018		
	FSG.25.H.NBR.G1/8.IG	0248674		

Vacuum cup

FG-H.32 Series

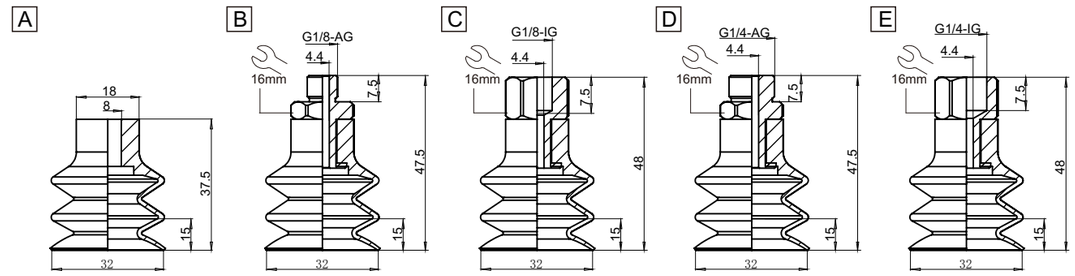

Vacuum cup information

Drawing	Model	PN	Fitting	
A	FG.32.H.HT1	0241459	—	
	FG.32.H.SI	0240721		
	FG.32.H.NBR	0249461		
B	FSG.32.H.HT1.G1/8.AG	0245541	FT.G1/8.M.E16	
	FSG.32.H.SI.G1/8.AG	0244777		
	FSG.32.H.NBR.G1/8.AG	0241512		
C	FSG.32.H.HT1.G1/8.IG	0247353	FT.G1/8.F.E16	
	FSG.32.H. SI.G1/8.IG	0243565		
	FSG.32.H.NBR.G1/8.IG	0248098		
D	FSG.32.H.HT1.G1/4.AG	0241862	FT.G1/4.M.E16	
	FSG.32.H.SI.G1/4.AG	0247858		
	FSG.32.H.NBR.G1/4.AG	0249884		
E	FSG.32.H.HT1.G1/4.IG	0248138	FT.G1/4.F.E16	
	FSG.32.H.SI.G1/4.IG	0247252		
	FSG.32.H.NBR.G1/4.IG	0247656		

FG.42.H Series

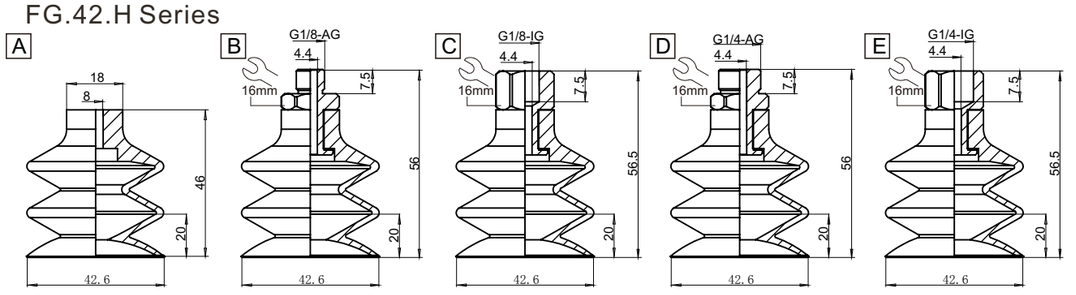

Vacuum cup information

Drawing	Model	PN	Fitting	
A	FG.42.H.HT1	0245082	—	
	FG.42.H.SI	0244190		
	FG.42.H.NBR	0240352		
B	FSG.42.H.HT1.G1/8.AG	0248970	FT.G1/8.M.E16	
	FSG.42.H.SI.G1/8.AG	0246178		
	FSG.42.H.NBR.G1/8.AG	0242239		
C	FSG.42.H.HT1.G1/8.IG	0240379	FT.G1/8.F.E16	
	FSG.42.H. SI.G1/8.IG	0248872		
	FSG.42.H.NBR.G1/8.IG	0249024		
D	FSG.42.H.HT1.G1/4.AG	0248549	FT.G1/4.M.E16	
	FSG.42.H.SI.G1/4.AG	0249408		
	FSG.42.H.NBR.G1/4.AG	0240401		
E	FSG.42.H.HT1.G1/4.IG	0241090	FT.G1/4.F.E16	
	FSG.42.H.SI.G1/4.IG	0248944		
	FSG.42.H.NBR.G1/4.IG	0247191		

Vacuum cup

FG.52.H Series

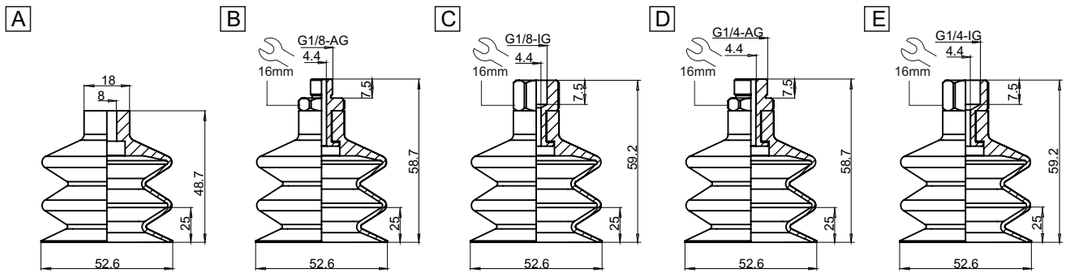

Vacuum cup information

Drawing	Model	PN	Fitting	
A	FG.52.H.HT1	0243273	—	
	FG.52.H.SI	0244436		
	FG.52.H.NBR	0247095		
B	FSG.52.H.HT1.G1/8.AG	0247546	FT.G1/8.M.E16	
	FSG.52.H.SI.G1/8.AG	0240288		
	FSG.52.H.NBR.G1/8.AG	0241655		
C	FSG.52.H.HT1.G1/8.IG	0243143	FT.G1/8.F.E16	
	FSG.52.H. SI.G1/8.IG	0248772		
	FSG.52.H.NBR.G1/8.IG	0240975		
D	FSG.52.H.HT1.G1/4.AG	0248990	FT.G1/4.M.E16	
	FSG.52.H.SI.G1/4.AG	0245450		
	FSG.52.H.NBR.G1/4.AG	0241431		
E	FSG.52.H.HT1.G1/4.IG	0246781	FT.G1/4.F.E16	
	FSG.52.H.SI.G1/4.IG	0242728		
	FSG.52.H.NBR.G1/4.IG	0243272		

FG.62.H Series

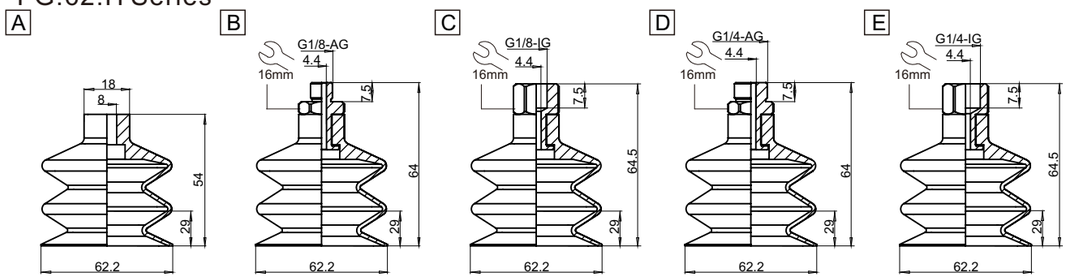

Vacuum cup information

Drawing	Model	PN	Fitting	
A	FG.62.H.HT1	0243357	—	
	FG.62.H.SI	0244634		
	FG.62.H.NBR	0249440		
B	FSG.62.H.HT1.G1/8.AG	0241691	FT.G1/8.M.E16	
	FSG.62.H.SI.G1/8.AG	0244306		
	FSG.62.H.NBR.G1/8.AG	0240235		
C	FSG.62.H.HT1.G1/8.IG	0245502	FT.G1/8.F.E16	
	FSG.62.H. SI.G1/8.IG	0247414		
	FSG.62.H.NBR.G1/8.IG	0247912		
D	FSG.62.H.HT1.G1/4.AG	0249596	FT.G1/4.M.E16	
	FSG.62.H.SI.G1/4.AG	0249384		
	FSG.62.H.NBR.G1/4.AG	0242374		
E	FSG.62.H.HT1.G1/4.IG	0245720	FT.G1/4.F.E16	
	FSG.62.H.SI.G1/4.IG	0240607		
	FSG.62.H.NBR.G1/4.IG	0248820		

Vacuum cup

Flat Vacuum cup

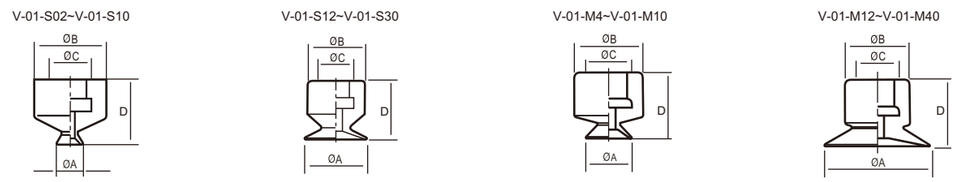

PN	Model	A [mm]	B [mm]	C [mm]	D [mm]	F [N]	[materials]	[Nipper]	
0244109	V-01-S02	2	10.5	7	16	0.5	Silicone	VT.M5.M.E8	
0244760	V-01-S04	4	10.5	7	16	0.7	Silicone		
0247629	V-01-S06	6	10.5	7	10.5	0.9	Silicone		
0241433	V-01-S08	8	10.5	7	10.5	1.1	Silicone		
0242161	V-01-S10	10	10.5	7	10.5	1.6	Silicone		
0245431	V-01-S12	12	10.5	7	10.5	2.0	Silicone		
0243634	V-01-S15	15	12	7	12	3.7	Silicone		
0241857	V-01-S20	20	12	7	12	6.1	Silicone		
0248069	V-01-S25	25	12	7	12	9.4	Silicone		
0248665	V-01-S30	30	12	7	12	15.9	Silicone		
0245729	V-01-M04	4	15	11	14	0.7	Silicone	VT.M5.M.E12	
0248046	V-01-M06	6	15	11	15	0.9	Silicone		
0246451	V-01-M08	8	15	11	15	1.1	Silicone		
0242213	V-01-M10	10	15	11	15	1.6	Silicone		
0247727	V-01-M12	12	15	11	15	2.0	Silicone		
0242508	V-01-M15	15	16	11	15	3.7	Silicone	VT.G1/8.M.E12	
0248574	V-01-M20	20	16	11	15	6.1	Silicone		
0246029	V-01-M25	25	15	11	15	9.4	Silicone		
0246078	V-01-M30	30	16	11	15	15.9	Silicone		
0240565	V-01-M40	40	17	11	16	26.7	Silicone		

2 Vacuum cup(2 Belows)

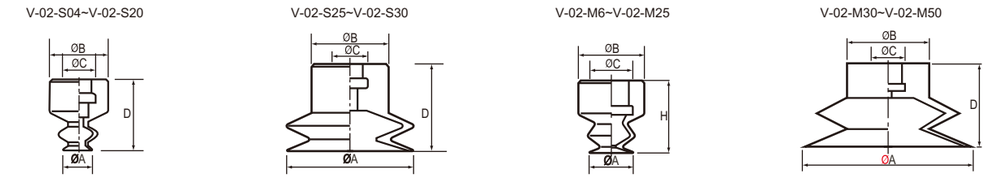

PN	Model	A [mm]	B [mm]	C [mm]	D [mm]	F [N]	[materials]	[Nipper]	
0241799	V-02-S06	6	12	7	15	0.9	Silicone	VT.M5.M.E8	
0245141	V-02-S08	8	12	7	15	1.1	Silicone		
0241127	V-02-S10	10	12	7	15	1.6	Silicone		
0242236	V-02-S12	12	12	7	15	2.0	Silicone		
0244829	V-02-S15	15	15	7	17	3.7	Silicone		
0241568	V-02-S20	20	15	7	16.5	6.1	Silicone		
0244670	V-02-S25	25	15	7	18	9.4	Silicone		
0244782	V-02-S30	30	15	7	20	15.9	Silicone		
0241690	V-02-M06	6	15	11	18	0.9	Silicone	VT.M5.M.E12	
0240784	V-02-M08	8	15	11	17	1.1	Silicone		
0241456	V-02-M10	10	15	11	17	1.6	Silicone		
0249877	V-02-M12	12	15	11	17	2.0	Silicone		
0240178	V-02-M15	15	15	11	18	3.7	Silicone		
0241952	V-02-M20	20	15	11	18	6.1	Silicone		
0240472	V-02-M25	25	15	11	18	9.4	Silicone		
0247767	V-02-M30	30	18	11	19	15.9	Silicone	VT.G18.M.E12	
0247579	V-02-M35	35	18	11	24	13.9	Silicone		
0244212	V-02-M40	40	23	11	22	26.7	Silicone		
0248074	V-02-M50	50	24	11	25	40	Silicone		

Vacuum cup

3 Vacuum cup(3 belows)

V-03-S06~V-03-S08

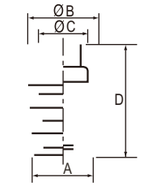

V-03-S10~V-03-S15

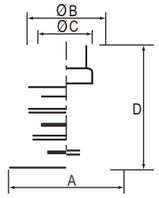

V-03-M08~V-03-M30

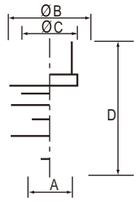

V-03-M40~V-03-M50

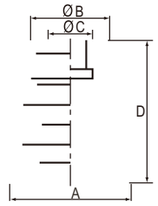

PN	Model	A [mm]	B [mm]	C [mm]	D [mm]	F [N]	[materials]	[Nipper]	
0241984	V-03-S04	4	10.5	7	15	0.7	Silicone	VT.M5.M.E8	
0241953	V-03-S06	6	10.5	7	15	0.9	Silicone		
0240471	V-03-S08	8	10.5	7	15	1.1	Silicone		
0247761	V-03-S10	10	10.5	7	15	1.6	Silicone		
0244211	V-03-S12	12	10.5	7	15	2.0	Silicone		
0249266	V-03-S15	15	12	7	20	3.7	Silicone		
0242813	V-03-M08	8	15	11	18	1.1	Silicone	VT.M5.M.E12	
0240402	V-03-M10	10	15	11	21	1.6	Silicone		
0249822	V-03-M15	15	16	11	21	3.7	Silicone		
0244373	V-03-M20	20	16	11	24	6.1	Silicone	VT.G1/8.M.E12	
0244153	V-03-M25	25	15	11	24	9.4	Silicone		
0248891	V-03-M30	30	16	11	25	15.9	Silicone		
0243506	V-03-M40	40	20	11	43	20.5	Silicone		
0246424	V-03-M50	40	20	11	42	25	Silicone		

Vacuum cup

Vacuum cup with sponge

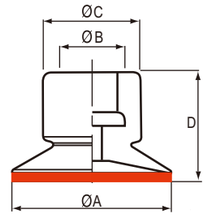

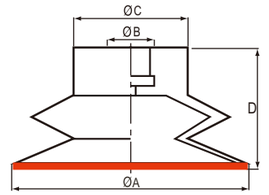

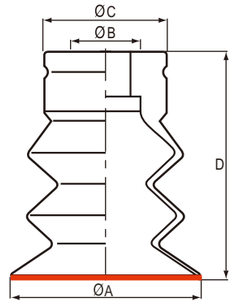

	PN	Model	A [mm]	B [mm]	C [mm]	D [mm]	[materials]	[Nipper]	
Flat	0245567	V-01-H10	10	11	15	14	Silicone	VT.M5.M.E12	
	0241322	V-01-H12	12	11	15	15	Silicone		
	0243882	V-01-H15	15	11	15	15	Silicone		
	0248599	V-01-H20	20	11	16	15	Silicone		
	0247850	V-01-H25	25	11	15	15	Silicone		
	0242612	V-01-H30	30	11	16	15	Silicone		
	0249971	V-01-H40	40	11	17	16	Silicone		
2 1.5belows	0247332	V-02-H10	10	11	15	17	Silicone	VT.M5.M.E12	
	0243804	V-02-H12	12	11	15	17	Silicone		
	0248103	V-02-H15	15	11	15	17	Silicone		
	0245941	V-02-H20	20	11	15	17	Silicone	VT.G1/8.M.E12	
	0244592	V-02-H25	25	11	15	18	Silicone		
	0249020	V-02-H30	30	11	18	19	Silicone		
	0243970	V-02-H40	40	11	23	22	Silicone		
	0246291	V-02-H50	50	11	24	24	Silicone		
3 2.5belows	0242187	V-03-H10	10	11	15	23	Silicone	VT.M5.M.E12	
	0242799	V-03-H12	12	11	15	25	Silicone		
	0245439	V-03-H15	15	11	15	26	Silicone		
	0245971	V-03-H20	20	11	15	25	Silicone	VT.G1/8.M.E12	
	0243395	V-03-H25	25	11	17	25	Silicone		
	0240934	V-03-H30	30	11	17	28	Silicone		
	0248253	V-03-H40	40	11	20	29	Silicone		
	0248376	V-03-H50	50	11	20	31	Silicone		

Vacuum cup





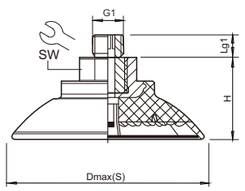

SAF...-AG(

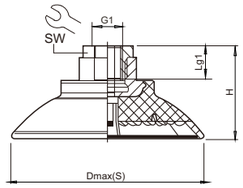

SAF...-IG(

PN	Model	Dmax(S) [mm]	G1 [mm]	H [mm]	Lg1 [mm]	SW [mm]	Weight
0246152	SAF.30.G1/4.AG	34	G1/4-M	20	10	17	17g
0245246	SAF.30.G1/4.IG	34	G1/4-F	20	12	17	14g
0240073	SAF.30.G3/8.IG	34	G3/8-F	36	9	22	43g
0241133	SAF.40.G1/4.AG	46	G1/4-M	22	10	17	19g
0245706	SAF.40.G1/4.IG	46	G1/4-F	22	12	17	14g
0245610	SAF.40.G3/8.IG	46	G3/8-F	38	9	22	45g
0244404	SAF.50.G1/4.AG	56	G1/4-M	28	10	22	40g
0244376	SAF.50.G1/4.IG	56	G1/4-F	33	15	22	45g
0249778	SAF.50.G3/8.IG	56	G3/8-F	28	15	22	31g
0244491	SAF.60.G1/4.AG	67	G1/4-M	31	10	22	46g
0246974	SAF.60.G1/4.IG	67	G1/4-F	36	15	22	51g
0241531	SAF.60.G3/8.IG	67	G3/8-F	31	15	22	37g
0246215	SAF.80.G1/4.AG	89	G1/4-M	35	10	22	65g
0243971	SAF.80.G1/4.IG	89	G1/4-F	40	20	22	70g
0244660	SAF.80.G3/8.IG	89	G3/8-F	35	15	22	56g
0242597	SAF.100.G1/4.AG	110	G1/4-M	36	10	22	76g
0243148	SAF.100.G1/4.IG	110	G1/4-F	41	20	22	81g
0245283	SAF.100.G3/8.IG	110	G3/8-F	36	15	22	67g
0249924	SAF.125.G1/4.AG	135	G1/4-M	43	10	22	155g
0241647	SAF.125.G1/4.IG	135	G1/4-F	48	20	22	160g
0240844	SAF.125.G3/8.IG	135	G3/8-F	43	15	22	146g

Vacuum cup





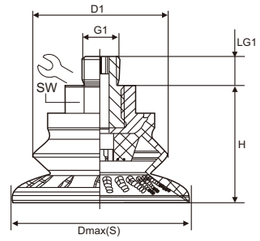

SAB...-AG(

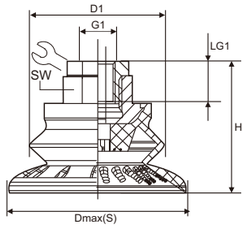

SAB...-IG(

PN	Model	Dmax(S) [mm]	G1 [mm]	H [mm]	Lg1 [mm]	SW [mm]	Weight
0249532	SAB.22.G1/4.AG	24	G1/4-M	25	10	16	15g
0246500	SAB.22.G1/4.IG	24	G1/4-F	25	12	16	9g
0240877	SAB.22.G3/8.IG	24	G3/8-F	41	9.5	22	41g
0248781	SAB.30.G1/4.AG	34	G1/4-M	28	10	17	19g
0241339	SAB.30.G1/4.IG	34	G1/4-F	28	12	17	14g
0246727	SAB.30.G3/8.IG	34	G3/8-F	44	9.5	22	45g
0245756	SAB.40.G1/4.AG	45	G1/4-M	28.8	10	17	20g
0249967	SAB.40.G1/4.IG	45	G1/4-F	28.8	12	17	14g
0242815	SAB.40.G3/8.IG	45	G3/8-F	44.8	9.5	22	45g
0249703	SAB.50.G1/4.AG	56	G1/4-M	36.9	10	22	41g
0247110	SAB.50.G1/4.IG	56	G1/4-F	42	20	22	45g
0247548	SAB.50.G3/8.IG	56	G3/8-F	36.9	15	22	32g
0247642	SAB.60.G1/4.AG	67	G1/4-M	41.3	10	22	49g
0245010	SAB.60.G1/4.IG	67	G1/4-F	46.3	20	22	53g
0244329	SAB.60.G3/8.IG	67	G3/8-F	41.3	15	22	40g
0248979	SAB.80.G1/4.AG	89	G1/4-M	49.9	10	22	72g
0246583	SAB.80.G1/4.IG	89	G1/4-F	54.9	20	22	76g
0240983	SAB.80.G3/8.IG	89	G3/8-F	49.9	15	22	63g
0240524	SAB.100.G1/4.AG	110	G1/4-M	56.6	10	22	97g
0240553	SAB.100.G1/4.IG	110	G1/4-F	61.8	20	22	102g
0243886	SAB.100.G3/8.IG	110	G3/8-F	56.6	15	22	88g
0240183	SAB.125.G1/4.AG	135	G1/4-M	67.8	10	22	179g
0244430	SAB.125.G1/4.IG	135	G1/4-F	72.8	20	22	183g
0246193	SAB.125.G3/8.IG	135	G3/8-F	67.7	15	22	170g

Vacuum cup





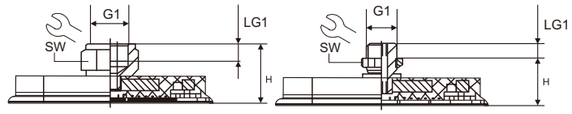

SAOF...-IG(

SAOF...-AG(

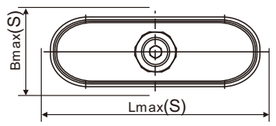

PN	Model	Lmax(S) [mm]	Bmax(S) [mm]	G1 [mm]	H [mm]	Lg1 [mm]	SW [mm]	Weight
0249268	SAOF.50x16.G1/4.AG	48.6	18	G1/4-M	26	8	17	24g
0249327	SAOF.50x16.G1/4.IG	48.6	18	G1/4-F	33	8	17	33g
0248172	SAOF.50x16.G3/8.IG	48.6	18	G3/8-F	34	9	22	45g
0243943	SAOF.60x23.G1/4.AG	60.6	25	G1/4-M	18	8	17	21g
0241586	SAOF.60x23.G1/4.IG	60.6	25	G1/4-F	26	8	17	29g
0248166	SAOF.60x23.G3/8.IG	60.6	25	G3/8-F	26	9	22	42g
0246773	SAOF.90x30.G1/4.AG	90.6	34	G1/4-M	19	8	17	39g
0245282	SAOF.90x30.G1/4.IG	90.6	34	G1/4-F	26	8	17	47g
0248645	SAOF.90x30.G3/8.IG	90.6	34	G3/8-F	27	9	22	60g
0246258	SAOF.80x40.G1/4.AG	80.6	43	G1/4-M	20	8	17	34g
0247188	SAOF.80x40.G1/4.IG	80.6	43	G1/4-F	28	8	17	43g
0242466	SAOF.80x40.G3/8.IG	80.6	43	G3/8-F	28	9	22	55g
0244302	SAOF.100x50.G1/4.AG	101.1	54	G1/4-M	22	8	17	63g
0240160	SAOF.100x50.G1/4.IG	101.1	54	G1/4-F	30	8	17	73g
0245368	SAOF.100x50.G3/8.IG	101.1	54	G3/8-F	31	9	22	85g
0240770	SAOF.120x60.G1/4.AG	126.6	65	G1/4-M	24	8	17	77g
0243358	SAOF.120x60.G1/4.IG	126.6	65	G1/4-F	32	8	17	87g
0243588	SAOF.120x60.G3/8.IG	126.6	65	G3/8-F	33	9	22	99g
0245789	SAOF.140x70.G1/4.AG	140.6	76	G1/4-M	25	8	17	85g
0249891	SAOF.140x70.G1/4.IG	140.6	76	G1/4-F	33	8	17	95g
0247346	SAOF.140x70.G3/8.IG	140.6	76	G3/8-F	34	9	22	107g

Vacuum cup





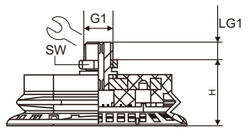

SAOB...-AG(

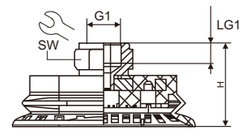

SAOB...-IG(

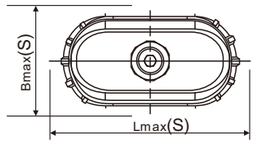

PN	Model	Lmax(S) [mm]	Bmax(S) [mm]	G1 [mm]	H [mm]	Lg1 [mm]	SW [mm]	Weight
0240074	SAOB.60x30.G1/4.AG	63	33	G1/4-M	27	8	17	49g
0243483	SAOB.60x30.G1/4.IG	63	33	G1/4-F	34.5	8	17	57g
0247856	SAOB.60x30.G3/8.IG	63	33	G3/8-F	35	9	22	70g
0242807	SAOB.80x40.G1/4.AG	83	43	G1/4-M	29.7	8	17	67g
0248118	SAOB.80x40.G1/4.IG	83	43	G1/4-F	37.2	8	17	75g
0248570	SAOB.80x40.G3/8.IG	83	43	G3/8-F	37.7	9	22	88g
0247432	SAOB.110x55.G1/4.AG	114	59	G1/4-M	35.5	8	17	87g
0242072	SAOB.110x55.G1/4.IG	114	59	G1/4-F	43	8	17	97g
0248851	SAOB.110x55.G3/8.IG	114	59	G3/8-F	43.5	9	22	109g
0243290	SAOB.140x70.G1/4.AG	146	75	G1/4-M	39.5	8	17	120g
0245023	SAOB.140x70.G1/4.IG	146	75	G1/4-F	47	8	17	130g
0246546	SAOB.140x70.G3/8.IG	146	75	G3/8-F	47.5	9	22	142g

Nipper

Nipper for FGA,FG

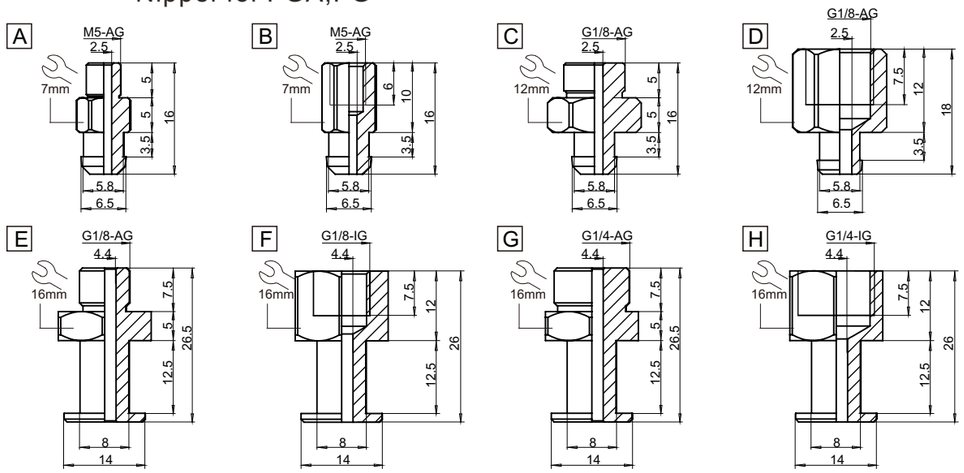

Nipper

Drawing	Model	PN	Description	Sucker
A	FT.M5.M.E7	0246182	M5 7mm ;M5 male fitting, 7 mm hex.	FGA-H.11~FGA-H.25 FG-H.12~FG-H.25
B	FT.M5.F.E7	0241532	M5 7mm ;M5 female fitting, 7 mm hex.	
C	FT.G1/8.M.E12	0242086	G1/8 12mm ;G1/8 male fitting, 12 mm hex.	
D	FT.G1/8.F.E12	0242487	G1/8 12mm ;G1/8 female fitting, 12 mm hex.	
E	FT.G1/8.M.E16	0249464	G1/8 16mm ;G1/8 male fitting, 16 mm hex.	FGA-H.33~FGA-H.63 FG-H.32~FG-H.62
F	FT.G1/8.F.E16	0240868	G1/8 16mm ;G1/8 female fitting, 16 mm hex.	
G	FT.G1/4.M.E16	0249032	G1/4 16mm ;G1/4 male fitting, 16 mm hex.	
H	FT.G1/4.F.E16	0249289	G1/4 16mm ;G1/4 female fitting, 16 mm hex.	

Nipper for V-01,V-02,V-03

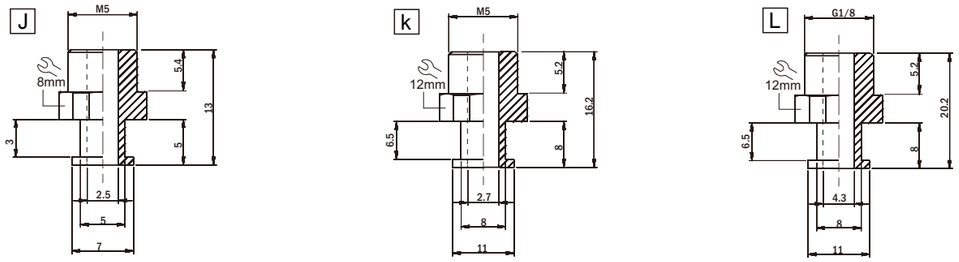

Nipper

Drawing	Model	PN	Description	Sucker
J	VT.M5.M.E8	0248644	M5 8mm ;M5 male fitting, 8 mm hex.	V-xx-S02~V-xx-S30
K	VT.M5.M.E12	0247082	M5 12mm ;M5 male fitting, 12 mm hex.	V-xx-M04~V-xx-M15 V-xx-H10~V-xx-H20
L	VT.G1/8.M.E12	0241633	G1/8 12mm ;G1/8 male fitting, 12 mm hex.	V-xx-M20~V-xx-M50 V-xx-H20~V-xx-H50

Sensor boxes

Used for sensor wiring on the EOATS.

PNP and NPN signals can be converted.

Input LED indications for easy trouble-shooting.

Provided with strain reliefs and kit for fastening to the profile.



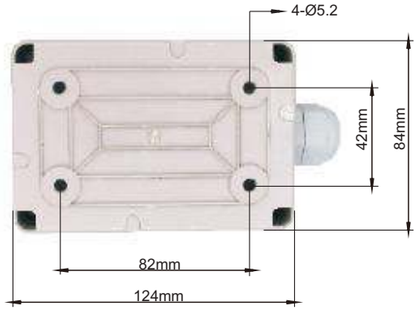

Input wiring instructions

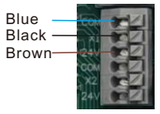

Output wiring instructions

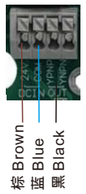

Input

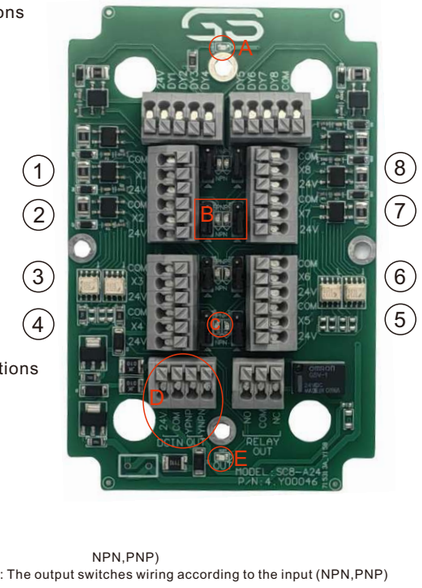

input

NPN,PNP)

Note: The output switches wiring according to the input (NPN,PNP)

A: Power indicator, power on; Red;

B: PNP and NPN signal switching ;

C: Input indicator (PNP: red, NPN, light green)

D: position of output wiring;

E: position of output wiring;

A:

B PNP NPN

C PNP NPN

D

E



Sensor boxes

PN	0244823
Model	ESA.ECB.08M

- 180g
- 24Vdc(±10%)
- 6A
- Weight 180g
- Piston bore 12mm
- Working current(MAX):6A

Sensor

Signal switching plug

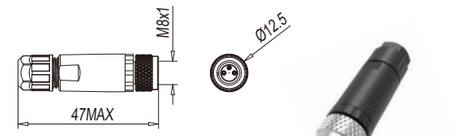

M8,3
M8, 3 pin straight- female

Signal switching plug	
PN	0249087
Model	ESA.ECM.03M8.F

- 5g
- Weight 5g

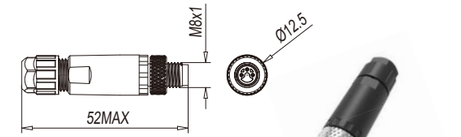

M8, 3
M8, 3 pin straight- male

Signal switching plug	
PN	0240239
Model	ESA.ECM.03M8.M

- 6g
- Weight 6g

Optional Magnetic Sensors

D-M9N/D-M9NV

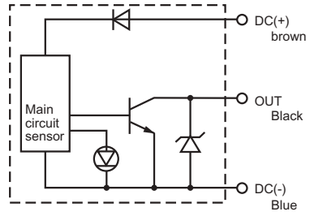

D-M9P/D-M9PV

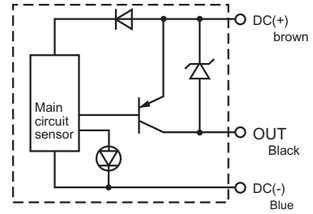



PN	Model	(Type)
0249643	D-M9N	NPN
0241270	D-M9P	PNP
0245659	D-M9NV	NPN
0243655	D-M9PV	PNP
	Sensing range	0-2.5mm

inductive Proximity sensor





PN	Model	(Type)
0245631	GX-F8A	NPN
0244181	GX-F8A-P	PNP
	Sensing range	0-2.5mm

NPN / NPN output type

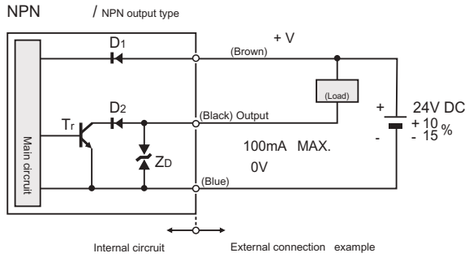

PNP PNP output type

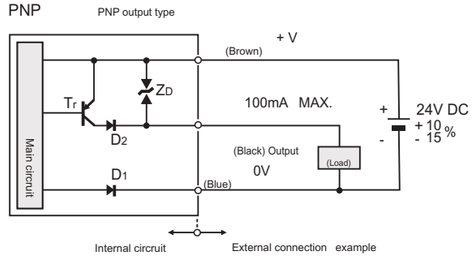

Note:Output is not equipped with short-circuit protection circuit.
Donot connect directly to power or capacitive loads.

Air Connector

FEATURES

- One-Touch tube fittings are used in pneumatics piping.
- The tube fittings come in a wide variety of models to meet all your needs in pneumatics piping.
- Even after installation,the direction of the tube can be changed freely.
- Nickel-Plated metal body ensures Anti-Corrosion and Anti-Contarmination.
- All R and NPT threads are Pre-Coated sealant.
- All cylindrical threads are standard with O-Ring seals.

SPECIFICATIONS

Fluid	Air,Vacuum
Operating Pressure	0~1.0MPa(150psi)
Negative Pressure	-100Kpa(-29.5 in·Hg)
Max Pressure	1.5MPa
Operating Temperature	0-60°C(32-140°F)
Applicable Tube	PU and Nylon

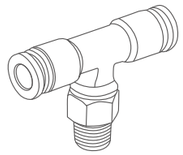
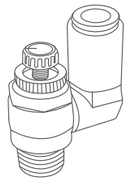
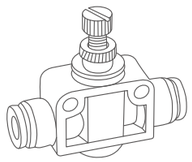
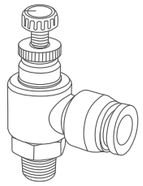

ORDER CODE

ESA . (2) . 8 (3) . 01 (4)

(1) Series

(2) Model
(3) Tube O.D.
(4) Thread Size

STRUCTURE CHART

Packing (NBR) Back Ring(POM) Collar(ZINC) Nylon Tube Polyurethane Tube

Resin Body(PBT)

O-Ring(NBR)

Lock Claws(SUS) Sleeve(POM)

Metal Body(Brass)

Code	4	6	8	10	12	14	16
Tube Outer Diameter mm	Φ4	Φ6	Φ8	Φ10	Φ12	Φ14	Φ16

Code	M5	M6	M8	M10	M12	M12A	M14	M16	M20
Thread	M5*0.8	M6*1	M8*1	M10*1	M12*1.25	M12*1.5	M14*1.5	M16*1.5	M20*1.5

Code	01	02	03	04	06
Thread	R1/8	R1/4	R3/8	R1/2	R3/4

Air Connector

ESA.FPC
Straight male adaptor:ESA.FPC


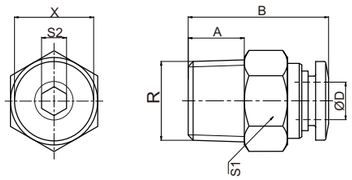

PN	Model	D [mm]	R [mm]	A [mm]	B [mm]	S1 [mm]	S2 [mm]	X [mm]
0241831	ESA.FPC.04.M5	Ø4	M5	4	21.6	10	2	9.9
0241284	ESA.FPC.04.01	Ø4	1/8	7.5	19.8	10	2	9.9
0242973	ESA.FPC.04.02	Ø4	1/4	9.5	18.1	10	3	9.9
0245547	ESA.FPC.06.M5	Ø6	M5	4	22.3	12	2	11.9
0241248	ESA.FPC.06.01	Ø6	1/8	7.5	20.8	12	2	11.9
0248254	ESA.FPC.06.02	Ø6	1/4	9.5	21.9	12	3	11.9
0241787	ESA.FPC.08.01	Ø8	1/8	7.5	26.9	14	5	13.9
0246913	ESA.FPC.08.02	Ø8	1/4	9.5	24.4	14	5	13.9
0246235	ESA.FPC.08.03	Ø8	3/8	10.5	22.4	17	6	13.9

L ESA.FPL
L male adaptor:ESA.FPL


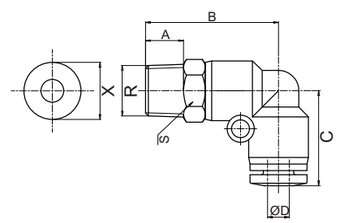

PN	Model	D [mm]	R [mm]	A [mm]	B [mm]	C [mm]	S [mm]	X [mm]
0248539	ESA.FPL.04.M5	Ø4	M5	4	23	17.25	10	9.9
0247691	ESA.FPL.04.01	Ø4	1/8	7.5	25.5	17.25	10	9.9
0241420	ESA.FPL.04.02	Ø4	1/4	9.5	27.5	17.25	14	9.9
0248558	ESA.FPL.06.M5	Ø6	M5	4	24.2	19	12	11.9
0246544	ESA.FPL.06.01	Ø6	1/8	7.5	26.8	19	12	11.9
0241256	ESA.FPL.06.02	Ø6	1/4	9.5	28.8	19	14	11.9
0241107	ESA.FPL.08.01	Ø8	1/8	7.5	29.7	22.1	14	13.9
0241352	ESA.FPL.08.02	Ø8	1/4	9.5	31.7	22.1	14	13.9
0243220	ESA.FPL.08.03	Ø8	3/8	10.5	33.2	22.1	17	13.9

Air Connector

T ESA.FPB
T male adaptor:ESA.FPB



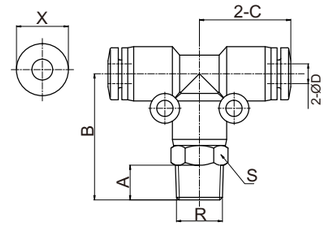

PN	Model	D [mm]	R [mm]	A [mm]	B [mm]	C [mm]	S [mm]	X [mm]
0244184	ESA.FPB.04.M5	Ø4	M5	4	24	18.2	10	9.9
0248459	ESA.FPB.04.01	Ø4	1/8	7.5	26.5	18.2	10	9.9
0243507	ESA.FPB.04.02	Ø4	1/4	9.5	28.5	18.2	14	9.9
0246620	ESA.FPB.06.M5	Ø6	M5	4	24.5	19	12	11.9
0246886	ESA.FPB.06.01	Ø6	1/8	7.5	27	19	12	11.9
0244145	ESA.FPB.06.02	Ø6	1/4	9.5	29	19	14	11.9
0247574	ESA.FPB.08.01	Ø8	1/8	7.5	30.1	22.5	14	13.9
0243540	ESA.FPB.08.02	Ø8	1/4	9.5	32.1	22.5	14	13.9
0241255	ESA.FPB.08.03	Ø8	3/8	10.5	33.6	22.5	17	13.9

ESA.FPU
Straight connector:ESA.FPU



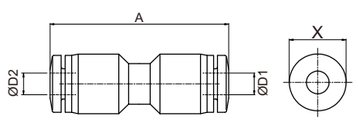

PN	Model	ØD1 [mm]	ØD2 [mm]	A [mm]	X [mm]
0248148	ESA.FPU.04.04	Ø4	Ø4	32.8	9.9
0246730	ESA.FPU.06.04	Ø6	Ø4	34.9	11.9
0245081	ESA.FPU.06.06	Ø6	Ø6	35.6	13.9
0242113	ESA.FPU.08.06	Ø6	Ø6	38.8	13.9
0241634	ESA.FPU.08.08	Ø8	Ø6	39.1	13.9

90° ESA.FPV
Elbow connector:ESA.FPV



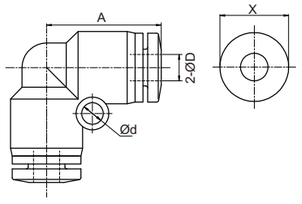

PN	Model	ØD [mm]	Ød [mm]	A [mm]	X [mm]
0240601	ESA.FPV.04.04	Ø4	Ø3.2	17.25	9.9
0242980	ESA.FPV.06.06	Ø6	Ø3.2	19	11.9
0242373	ESA.FPV.08.08	Ø8	Ø3.2	22.8	13.9

Air Connector

T ESA.FPE
T Connector:ESA.FPE



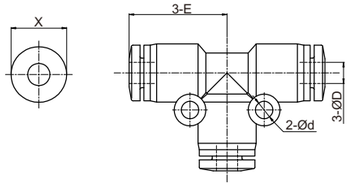

PN	Model	ØD [mm]	Ød [mm]	E [mm]	X [mm]
0241480	ESA.FPE.04.04	Ø4	Ø3.2	18.2	9.9
0241680	ESA.FPE.06.06	Ø6	Ø3.2	19.5	11.9
0240390	ESA.FPE.08.08	Ø8	Ø3.2	22.8	13.9

Y ESA.FPY
Y Connector:ESA.FPY



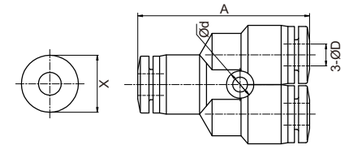

PN	Model	ØD [mm]	Ød [mm]	A [mm]	X [mm]
0240704	ESA.FPY.04.04	Ø4	Ø3.2	35.1	9.9
0247309	ESA.FPY.06.06	Ø6	Ø3.2	37.1	11.9
0244226	ESA.FPY.08.08	Ø8	Ø3.2	40.4	13.9

ESA.FPZ
Four-way Connector:ESA.FPZ



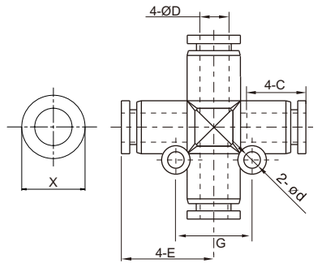

PN	Model	ØD [mm]	Ød [mm]	C [mm]	E [mm]	G [mm]	X [mm]
0245159	ESA.FPZ.04.04	Ø4	Ø3.3	14.9	17.95	14	9.9
0241682	ESA.FPZ.06.06	Ø6	Ø3.3	15.5	18.9	16	11.9
0241018	ESA.FPZ.08.08	Ø8	Ø3.3	17.8	22.3	18	13.9

Air Connector

5 ESA.FPK
Five-way Connector:ESA.FPK



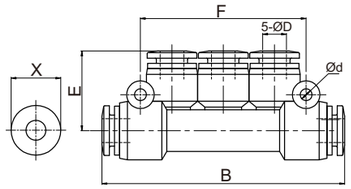

PN	Model	ØD [mm]	Ød [mm]	B [mm]	E [mm]	F [mm]	X [mm]
0245669	ESA.FPK.04.04	Ø4	Ø3.2	58.4	18.3	36.75	9.9
0245616	ESA.FPK.06.06	Ø6	Ø3.2	64.5	20	42.8	11.9
0248447	ESA.FPK.08.08	Ø8	Ø3.2	79.6	24.5	48.7	13.9

ESA.FPP
Pipe plug:ESA.FPP



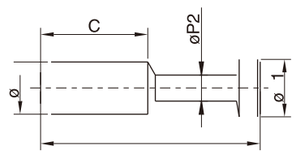

PN	Model	ØD [mm]	ØP1 [mm]	ØP2 [mm]	C [mm]	B [mm]
0248812	ESA.FPP.04.04	Ø4	Ø5	3	15	28
0240523	ESA.FPP.06.06	Ø6	Ø7	3	17	33
0248850	ESA.FPP.08.08	Ø8	Ø9	4	18	37

ESA.FPA
Male plug





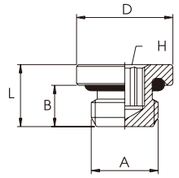

PN	Model	A [mm]	B [mm]	C [mm]	D [mm]	CH [mm]
0247860	ESA.FPA.M5	M5	4	6	8	2
0245732	ESA.FPA.[illegible]8	G1/8	6	8.5	14	5
0246786	ESA.FPA.[illegible]4	G1/4	8	11	17	6

PU PU air-hose



CHARATERISTICS

- Material ;Ester-Base Polyurethane
- Durometer; 95A or 98 A
- Fluid: Air
- Operating Temperature：-20℃～+80℃
- Features:Excellent performance of resistance against high pressure, vibration, weather,corrosion and bending,flexible for connecting air piping system.

ORDER CODE

ESA . [ ] . 100M . BU

- ESA — Series
- [ ] — O.D.
  4: 4.0mm
  6: 6.0mm
  8: 8.0mm
- 100M — Length
  100M
  200M
- BU — Color
  BU:Blue
  C:Transparent
  O:Orange
  B:Black
  G:Green
  Y:Yellow
  R:Red

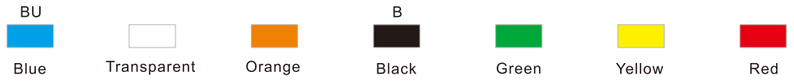

SPECIFICATIONS

[illegible]	[illegible]	O.D.(mm)	[illegible]	Length(M/roll)	Bursting pressure at 20°C(Bar)	Min. bending radius at 20°C(mm)
0241489	ESA.PU04.100.B	4	Black	100	30	10
0248159	ESA.PU04.100.BU	4	Blue	100	30	10
0242690	ESA.PU04.100.G	4	Green	100	30	10
0244850	ESA.PU04.100.C	4	Ttansparent	100	30	10
0242984	ESA.PU04.100.Y	4	Yellow	100	30	10
0249114	ESA.PU04.100.R	4	Red	100	30	10
0245998	ESA.PU04.100.O	4	Orange	100	30	10
0248904	ESA.PU06.100.B	6	Black	100	30	15
0241391	ESA.PU06.100.BU	6	Blue	100	30	15
0244687	ESA.PU06.100.G	6	Green	100	30	15
0249398	ESA.PU06.100.C	6	Ttansparent	100	30	15
0240843	ESA.PU06.100.Y	6	Yellow	100	30	15
0241649	ESA.PU06.100.R	6	Red	100	30	15
0248184	ESA.PU06.100.O	6	Orange	100	30	15
0248598	ESA.PU08.100.B	8	Black	100	30	20
0246675	ESA.PU08.100.BU	8	Blue	100	30	20
0246363	ESA.PU08.100.G	8	Green	100	30	20
0249913	ESA.PU08.100.C	8	Ttansparent	100	30	20
0248296	ESA.PU08.100.Y	8	Yellow	100	30	20
0245423	ESA.PU08.100.R	8	Red	100	30	20
0247340	ESA.PU08.100.O	8	Orange	100	30	20

VESSEL

AIR NIPPER





Air Scissors



Displacement type Air nipper
P243~P259



Air push nipper
P260~P262



Air heat nippers
P263~P267



Air nipper
P268~P284

Magnets



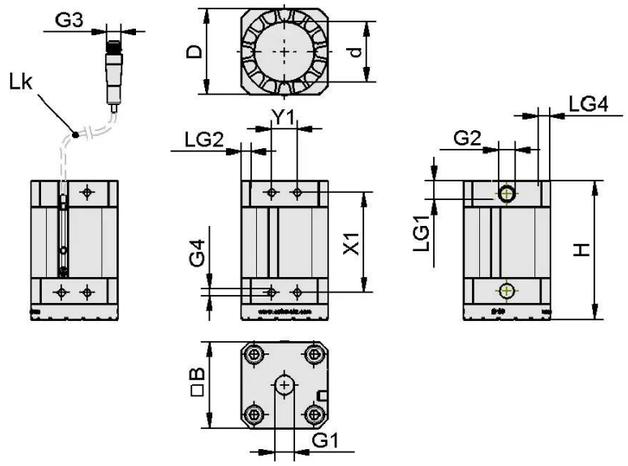

Model	GS.SGM.30.G18
B	30.1 mm
D	29.5 mm
d	16.5 mm
G1	G1/8"-F
G2	G1/8"-F
G4	M4-F
H	70.2 mm
LG1	7 mm
LG2	6 mm
LG4	5 mm
X1	46 mm
Y1	12 mm

Quick changer
Eoat components
Gripp components
Vacuum components
Fitting
AIR NIPPERS
STATIC SOLUTIONS
Special grippers

Magnets



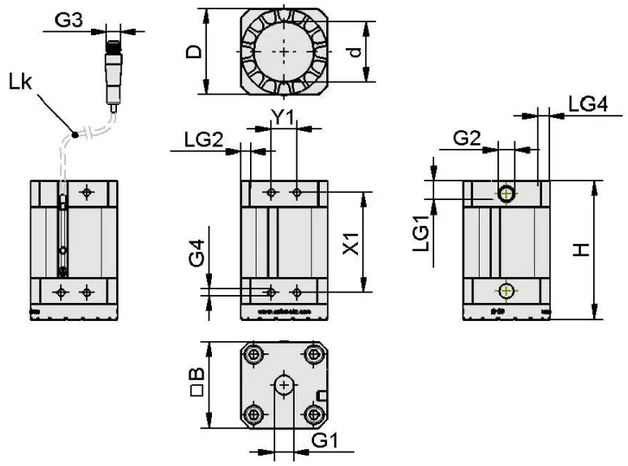

Model	GS.SGM.40.G18
B	40.65 mm
D	40 mm
d	26 mm
G1	G1/4"-F
G2	G1/8"-F
G4	M4-F
H	70.2 mm
LG1	11 mm
LG2	6 mm
LG4	7 mm
X1	46 mm
Y1	12 mm



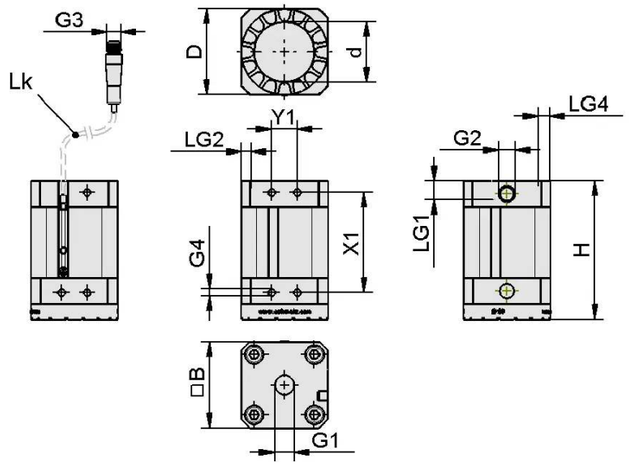

Model	GS.SGM.50.G18
B	50.7 mm
D	50 mm
d	35 mm
G1	G1/4"-F
G2	G1/8"-F
G4	M5-F
H	80.2 mm
LG1	11 mm
LG2	6 mm
LG4	7 mm
X1	58 mm
Y1	15 mm

Magnets



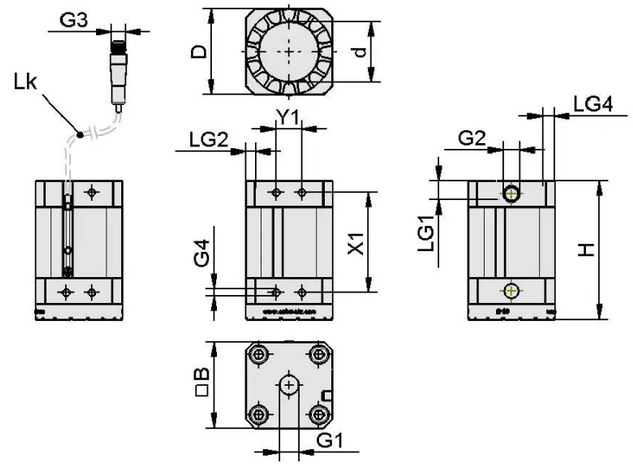

Model	GS.SGM.70.G18
B	68.75 mm
D	68 mm
d	51 mm
G1	G1/4"-F
G2	G1/8"-F
G4	M5-F
H	80.2 mm
LG1	11 mm
LG2	6 mm
LG4	8 mm
X1	58 mm
Y1	15 mm